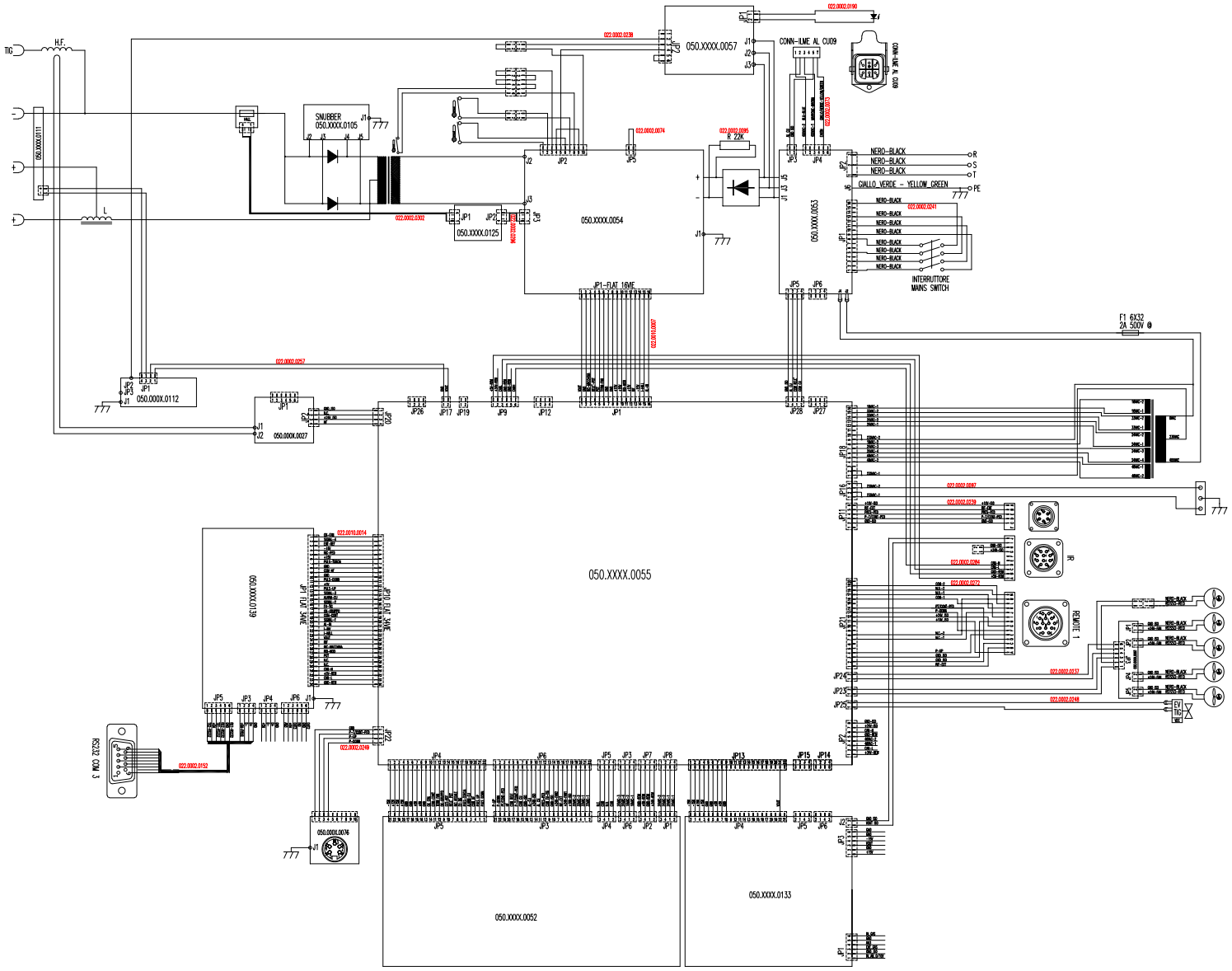
TIG
H.F.
L
SNUBBER
050.XXXX.0105
050.XXXX.0057
CONN-IME AL CU09
R 22K
NERO-BLACK
GIALLO VERDE - YELLOW GREEN
INTERRUTTORE
MAINS SWITCH
F1 6X32
2A 500V @
050.XXXX.0054
050.XXXX.0053
050.XXXX.0125
050.000X.0112
050.000X.0027
JP1-FLAT 10WE
050.XXXX.0055
050.XXXX.0019
JP1 FLAT 34WE
RS232 COM 3
050.0000.0076
050.XXXX.0052
050.XXXX.0133
IR
REMOTE 1

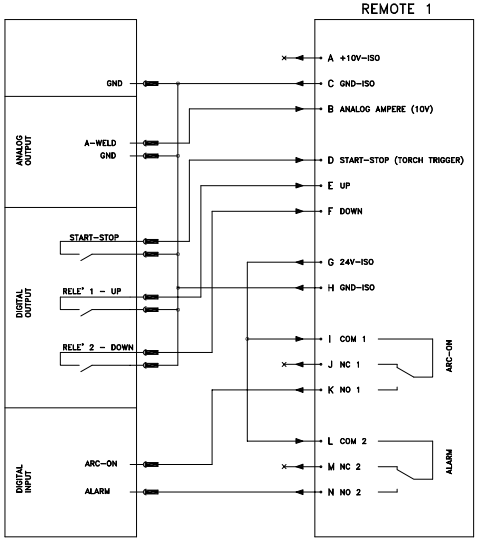
REMOTE 1
GND
ANALOG OUTPUT
A-WELD
GND
DIGITAL OUTPUT
START-STOP
RELE' 1 - UP
RELE' 2 - DOWN
DIGITAL INPUT
ARC-ON
ALARM
A +10V-ISO
C GND-ISO
B ANALOG AMPERE (10V)
D START-STOP (TORCH TRIGGER)
E UP
F DOWN
G 24V-ISO
H GND-ISO
I COM 1
J NC 1
K NO 1
L COM 2
M NC 2
N NO 2
ARC-ON
ALARM

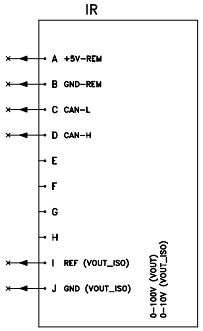
IR
A +5V-REM
B GND-REM
C CAN-L
D CAN-H
E
F
G
H
I REF (VOUT_ISO)
J GND (VOUT_ISO)
0-100V (VOUT)
0-10V (VOUT_ISO)