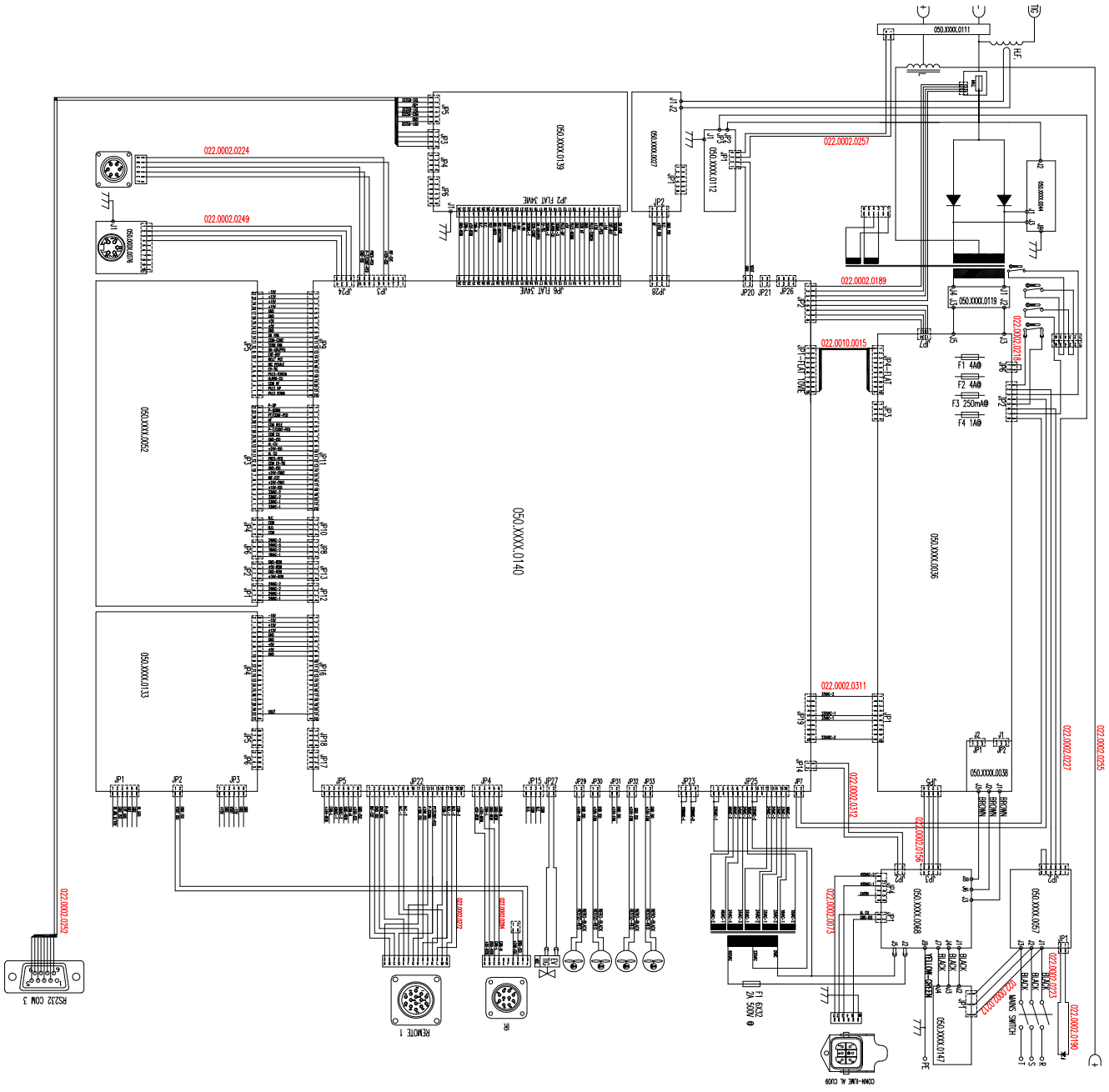
050.XXXX.0140
050.XXXX.0139
050.XXXX.0052
050.XXXX.0133
050.XXXX.0036
050.XXXX.0038
050.XXXX.0068
050.XXXX.0067
050.XXXX.0147
050.XXXX.0119
050.XXXX.0111
050.XXXX.0112
050.XXXX.0077
050.XXXX.0044
050.XXXX.0078
022.0002.0224
022.0002.0249
022.0002.0257
022.0002.0189
022.0010.0015
022.0002.0311
022.0002.0312
022.0002.0255
022.0002.0227
022.0002.0252
022.0002.0203
022.0002.0233
022.0002.0190
F1 4A@
F2 4A@
F3 250mA@
F4 1A@
F1 6A72
2A 500V @
JP2 FLAT 34WE
JP6 FLAT 34WE
REMOTE 1
RS232 COM 3
CONN-LINE M. C109
MAINS SWITCH
BROWN
BLACK
YELLOW-GREEN

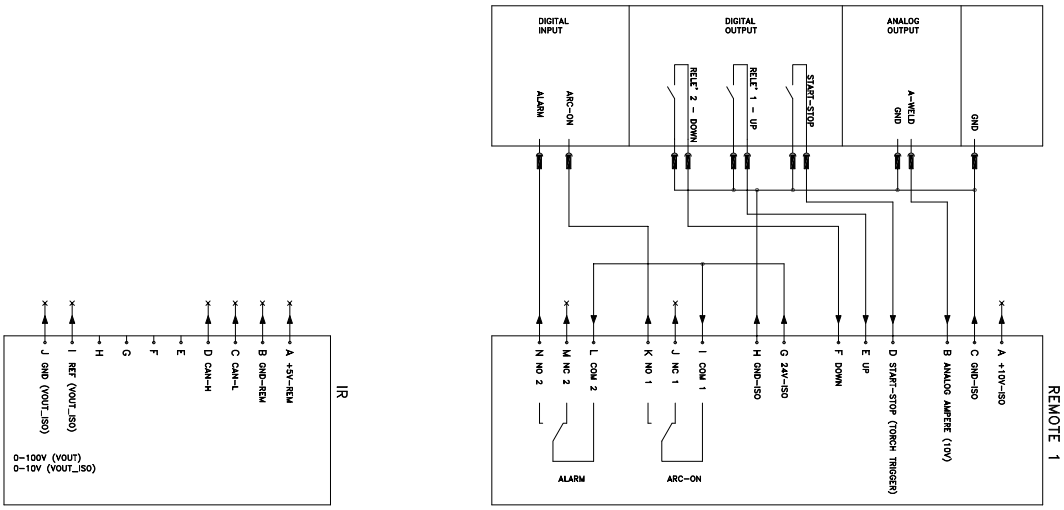
DIGITAL INPUT
DIGITAL OUTPUT
ANALOG OUTPUT
ALARM
ARC-ON
RELE' 2 - DOWN
RELE' 1 - UP
START-STOP
A-WELD GND
GND
N NO 2
M NC 2
L COM 2
K NO 1
J NC 1
I COM 1
H GND-ISO
G 24V-ISO
F DOWN
E UP
D START-STOP (TORCH TRIGGER)
B ANALOG AMPERE (10V)
C GND-ISO
A +10V-ISO
ALARM
ARC-ON
REMOTE 1
J GND (VOUT_ISO)
I REF (VOUT_ISO)
H
G
F
E
D CAN-H
C CAN-L
B GND-REM
A +5V-REM
0-100V (VOUT)
0-10V (VOUT_ISO)
IR