Cod. 006.0001.1600
11/07/2022 V.2.12

WELD THE WORLD

Pioneer 321 MKS

Instruction Manual

Translation of original instructions

ENGLISH

INDEX

1 INTRODUCTION

	IMPORTANT!

This handbook must be handed over to the user prior to installation and commissioning of the unit.
Read the "General prescriptions for use" handbook supplied separately from this manual before installing and commissioning the unit.
The meaning of the symbols in this manual and the associated precautionary information are given in the "General prescriptions for use".
If the "General prescriptions for use" are not present, it is mandatory to request a replacement copy from the manufacturer or from your dealer.
Retain these documents for future consultation.

KEY

	DANGER!

This pictogram warns of danger of death or serious injury.

	WARNING!

This pictogram warns of a risk of injury or damage to property.

	CAUTION!

This pictogram warns of a potentially hazardous situation.

	INFORMATION!

This pictogram gives important information concerning the execution of the relevant operations.

➲	This symbol identifies an action that occurs automatically as a result of a previous action.
ⓘ	This symbol identifies additional information or a reference to a different section of the manual containing the associated information.
§	This symbol identifies a reference to a chapter of the manual.

NOTE
The figures in this manual are purely guideline and the images may contain differences with respect to the actual equipment to which they refer.

1.1 INTRODUCTION

Pioneer 321 MKS is a synergic three-phase inverter suitable for workshops, car body repairs, light to medium carpentry and welding on positioners.

Accessories that can be connected to the unit:
- liquid cooler for torches.

The welding modes and procedures available are those indicated in the table.

PROCEDURE	
	THREE LEVEL (3T)
	TWO STROKE (2T)
	FOUR STROKE (4T)

2 INSTALLATION

DANGER!
Lifting and positioning

Read the warnings highlighted by the following symbols in the "General prescriptions for use".

2.1 UNIT ASSEMBLY

1. Fit the front swivel wheels with the supplied screws.
2. Screw the fixed rear wheels to the studs in the base of the unit and secure them with the supplied nuts.

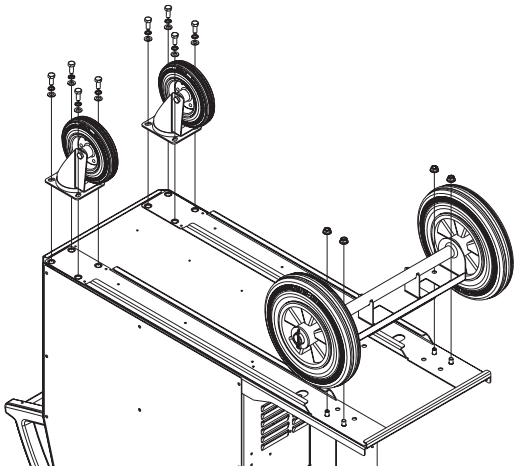

3. Mount the cooler in the relevant location.

4. Screw the cooler fixing bracket to the welding power source chassis using the supplied screws.
5. Screw the base of the cooler to the unit base using the supplied screws.

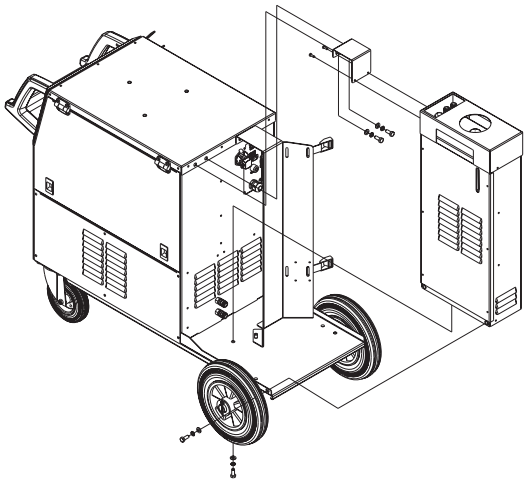

2.2 CONNECTIONS TO THE MAINS POWER SUPPLY

The mains power supply features to which the equipment should be connected are given in paragraph “7 TECHNICAL DATA”.
The machine can be connected to motor-generators provided their voltage is stabilised.
Connect/disconnect the various devices with the machine switched off.

2.3 WIRE SPOOL POSITIONING

1. Open the unit side door to gain access to the spool compartment. 2. Unscrew the cap of the spool holder.	
3. If necessary, fit an adapter for the wire spool.	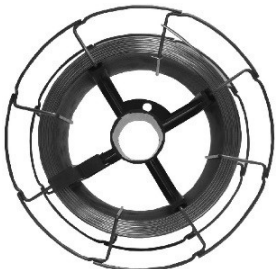

4. Fit the spool in the spool holder, ensuring it is located correctly.	
5. Adjust the spool holder braking system by tightening/loosening the screw in such a way that the wire feed force is not excessive and when the spool stops rotating no excess wire is released.	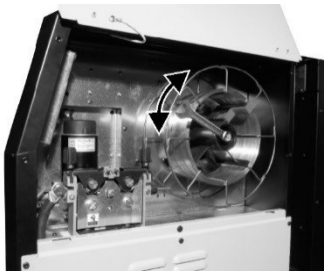
6. Refit the plug.	

2.4 POSITIONING THE WIRE IN THE WIRE FEEDER

WARNING!
Mechanical Hazards

Read the warnings highlighted by the following symbols in the "General prescriptions for use".

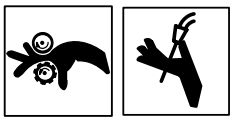

1. Lower the wire feeder pressure devices.

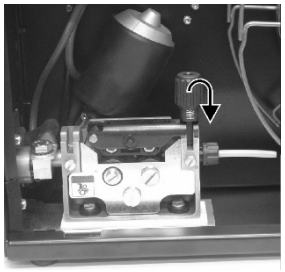

2. Raise the wire feeder pressure arms.
3. Remove the protective cover.
4. Check that the feed rolls are suitable for the wire gauge.

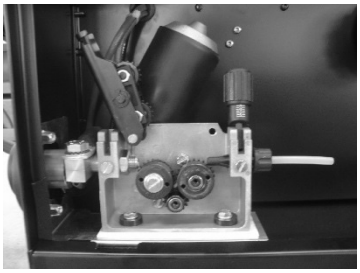

(See § “9.2 WIRE FEED ROLLERS”)
The diameter of the roll groove must be compatible with the diameter of the welding wire.
The roll must be of suitable shape in relation to the composition of the wire material.
The groove must feature a "U" profile for soft materials (Aluminium and its alloys, CuSi3).
The groove must be "V" shaped for harder materials (SG2-SG3, stainless steels).
Rolls with a knurled groove profile are available for flux-cored wire.

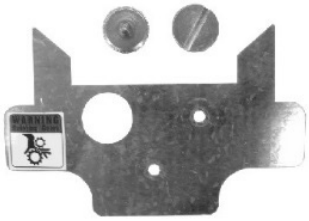

5. Feed the wire between the wire feeder rolls and insert it into the MIG/MAG TORCH connector plug.
6. Make sure the wire is located correctly in the roll grooves.

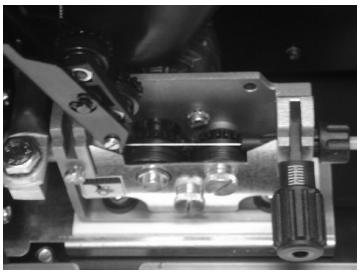

7. Close the wire feeder pressure arms.
8. Adjust the pressure system so that the arms press the wire with a force that does not deform it while also ensuring constant feed rate without slipping.
9. Refit the protective cover.
10. Close the spool compartment door in the side of the unit.

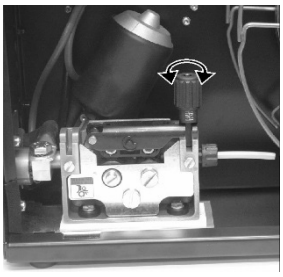

2.5 CONNECTIONS TO SOCKETS

1. Set the welding power source ON/OFF switch to “O” (unit switched off).
2. Plug the power cable plug into a mains socket outlet.
3. Connect the gas hose from the welding gas cylinder to the rear gas connection.
4. Open the cylinder gas valve.
5. Connect the power supply cable for the cooling unit to the auxiliary power socket on the power generator.
6. Attach the coolant hoses to the relevant connectors on the cooler and on the power source rear panel.
7. Connect the MIG/MAG torch plug to the EURO TORCH welding socket.
8. Attach the coolant hoses of the MIG/MAG torch to the relevant connectors on the power source front panel.
9. Connect the plug of the ground clamp to the welding socket on the basis of the polarity required.
10. Connect the earth clamp to the workpiece being processed.
11. Set the welding power source ON/OFF switch to “I” (unit switched on).
12. Feed the wire through the torch until it protrudes from the tip, pressing button on the unit front panel.
13. Select the torch trigger procedure on the user interface.

14. Press the torch trigger with the torch well clear of any metal parts. This serves to open the gas solenoid valve without striking the welding arc.
15. Use the flow control valve to adjust the flow of gas as required while the gas is flowing out.
16. Set the required welding parameter values on the user interface.

ⓘ On connecting and enabling a remote control [RC] certain settings can be modified from said controller without having to take action on the user interface of the welding power source.

The system is ready to start welding.

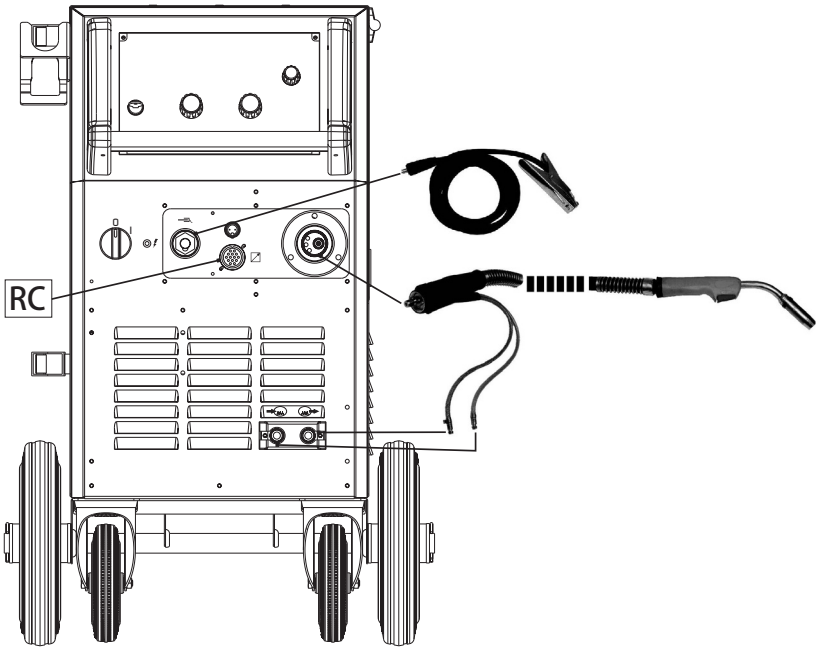

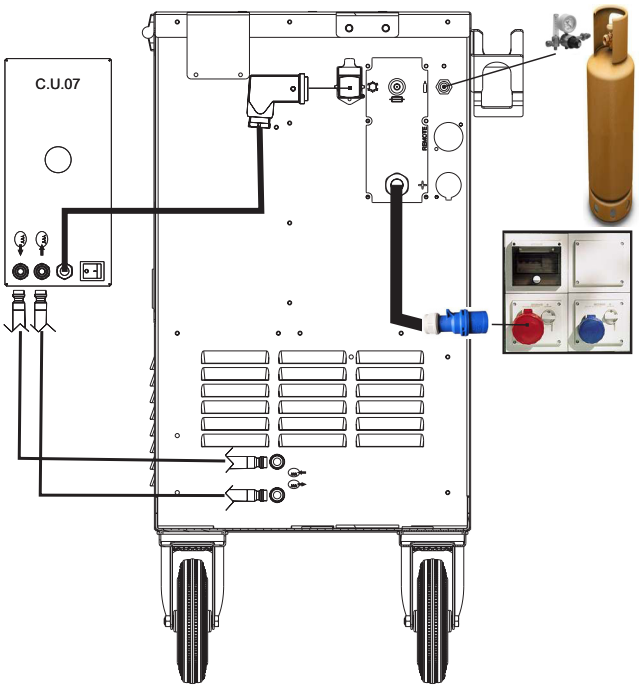

2.6 FRONT PANEL

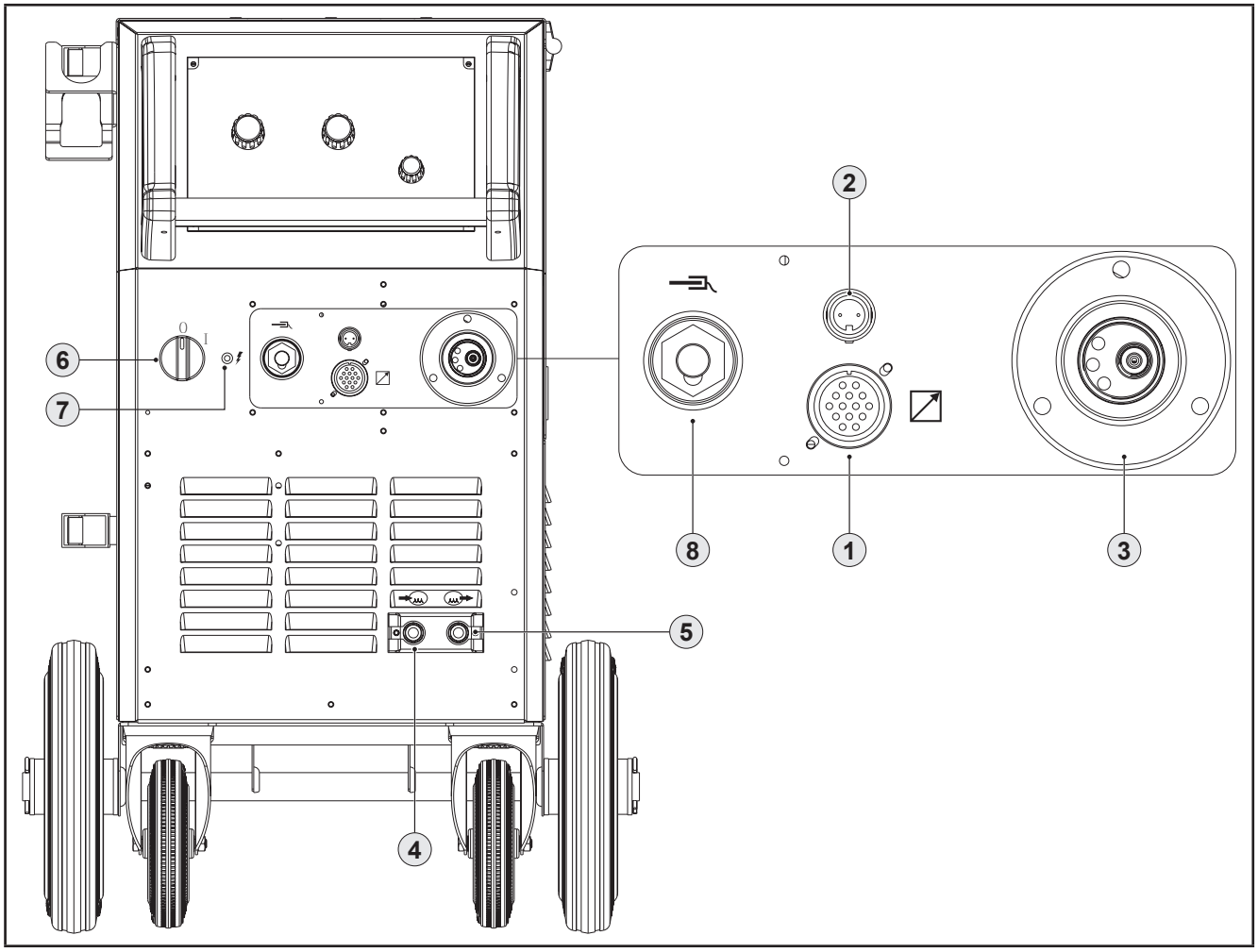

1: Remote control connector.
2: Provision for connection of the push pull torch (purchasing and installing the relative kit).
3: EURO TORCH welding socket.
4: Connector for coolant hose.
Torch → Power source
5: Connector for coolant hose.
Power source → Torch
6: Welding power source ON/OFF switch.
7: Mains protection ON LED.
This LED illuminates if an incorrect operating condition occurs:
Absence of a phase in the power supply line.
8: Earth welding socket.

2.7 REAR PANEL

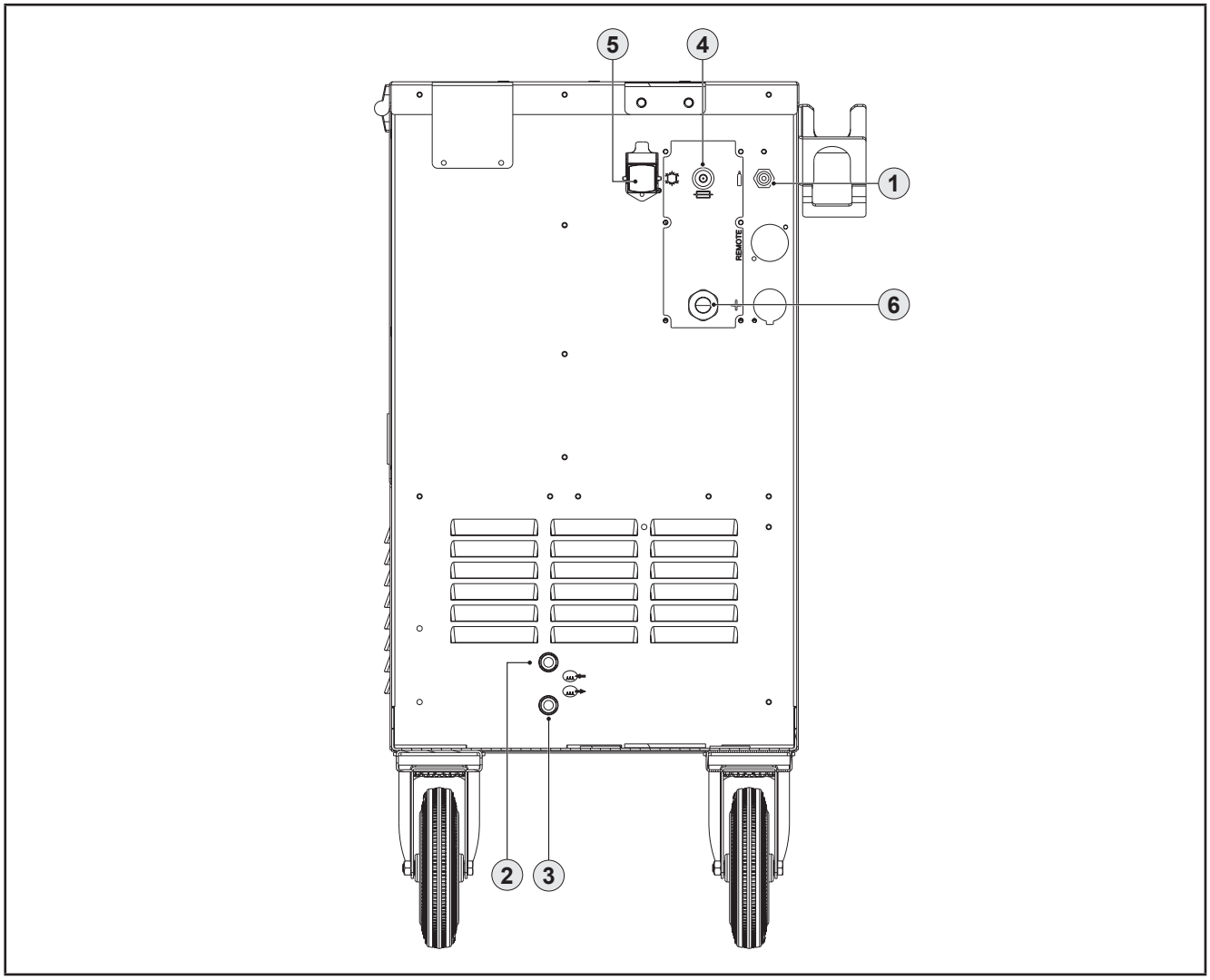

1: Gas rear connector. Provided to connect the gas pipe coming from the cable harness.
2: Connector for coolant hose.
Cooler → power source
3: Connector for coolant hose.
Power source → Cooler
4: Power supply transformer fuse.
- Type Delayed acting (T)
- Amperage 2.0 A
- Voltage 500 V

5: Connector to power the cooling unit.
- Voltage 230 V~
- Output current 0.8 A
- IP protection rating IP20 (cap open)
  IP66 (cap closed)

WARNING!
High voltage

If the socket is not connected to any devices always close the cap: presence of hazardous voltage levels!

6: Power cable.

- Total length (including internal part) 4.5 m
- Number and cross section of wires 4 x 4.0 mm^2
- Power plug type not supplied

3 COMMISSIONING

3.1 USER INTERFACE

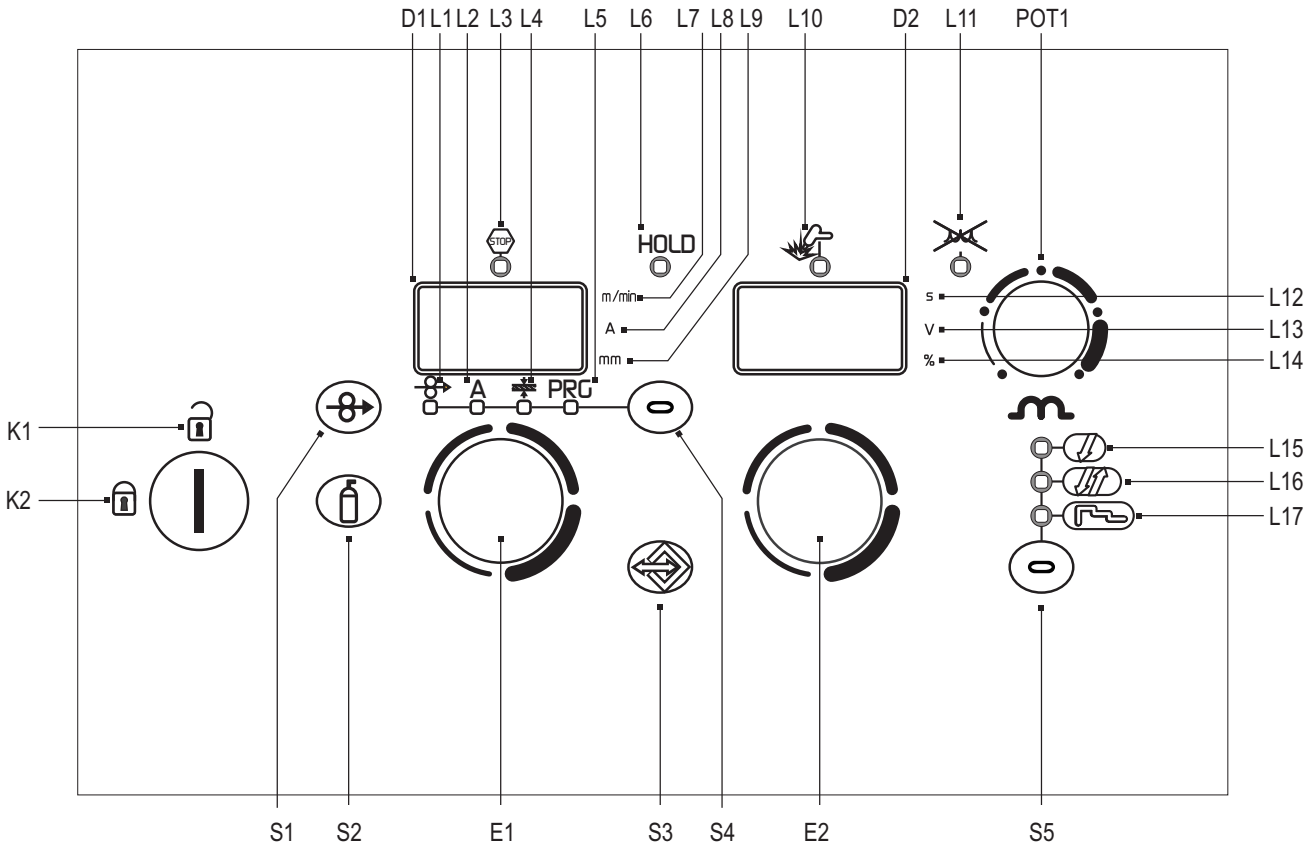

CODE	SYMBOL	DESCRIPTION
L1		illumination shows that the following parameter can be set: WIRE FEED RATE
L2	A	illumination shows that the following parameter can be set: WELDING CURRENT
L3	STOP	This LED illuminates to show an anomaly in the operating conditions. ⓘ See § “GESTIONE DEGLI ALLARMI”.
L4		illumination shows that the following parameter can be set: THICKNESS
L5	PRG	Illuminates to show that the required Synergic welding program can be set.
L6	HOLD	Illumination of this LED indicates the display of the average voltage and current value measured during the final moments of welding. The value appears on the following displays: D1-D2
L7	m/min	Illuminates to show a value in the following unit of measurement: METRES PER MINUTE
L8	A	Illuminates to show a value in the following unit of measurement: AMPERES
L9	mm	Illuminates to show a value in the following unit of measurement: MILLIMETRES
L10		This LED illuminates to confirm the presence of power on the output sockets.

CODE	SYMBOL	DESCRIPTION
L12	S	Illuminates to show a value in the following unit of measurement: SECONDS
L13	V	Illuminates to show a value in the following unit of measurement: VOLTS
L14	%	Illuminates to show a value in the following unit of measurement: PERCENTAGE
L15		Illumination shows that the following function has been activated: 2 stroke procedure.
L16		Illumination shows that the following function has been activated: 4 stroke procedure.
L17		Illumination shows that the following function has been activated: 3 stroke special procedure
D1		**Parameters/functions setting** l display shows the value of the selected main welding parameter.
		Welding The display shows the effective amperes value during welding.
		Menu function The display shows the acronym of the parameter or function to be adjusted.
		Programs setting The display shows the message P “program no.”.
D2		**Parameters/functions setting** The display shows the programmed voltage.
		Welding The display shows the effective voltage used when welding.
		Menu function The display shows the value of the parameter or function to be adjusted.
		Programs setting The display shows the acronym of the material to be welded on the basis of the selected synergic curve.
S1		This button activates the wire feed to insert it through the MIG/MAG torch.
S2		This button opens the gas solenoid valve to fill the circuit and calibrate the flow pressure with the regulator located on the gas cylinder.
		Gas menu function Hold down the button for 3 seconds to open the menu.
S3		**Press and release:** the button opens the JOBs upload menu. **Hold down for 3 seconds:** the button opens the JOBs save and delete menu.
S4		**Parameters/functions setting** Manual MIG/MAG mode: the button selects one of the following settings: WIRE SPEED - SYNERGIC PROGRAM SYNERGIC MIG/MAG mode: the button selects one of the following settings: WIRE SPEED - WELDING CURRENT - THICKNESS - SYNERGIC PROGRAM
		Data setting: Hold down the button for 3 seconds to gain access to the second level menu.
		Powering up the unit This button opens the initial setup menu.
S5		MIG/MAG mode: this button selects the torch trigger procedure.

CODE	SYMBOL	DESCRIPTION
E1		**Parameters/functions setting** Manual MIG/MAG mode: the encoder sets the wire feed rate. Synergic MIG/MAG mode: the encoder sets the main adjustment value.
		Welding The encoder selects the main welding parameter to be set.
		Menu function The encoder selects the function or parameter to be adjusted.
		Programs setting The encoder selects the synergic program to be uploaded.
E2		**Parameters/functions setting** Manual MIG/MAG mode: the encoder sets the welding voltage. Synergic MIG/MAG mode: the encoder sets the arc correction.
		Menu function The encoder sets the value of the selected function or parameter.
		Programs setting The encoder selects the MIG/MAG welding program.
POT1		Manual MIG/MAG mode: the potentiometer sets the inductance value. Synergic MIG/MAG mode: the potentiometer sets the inductance value from the minimum to the maximum permissible value in accordance with the selected synergic curve.
K1		**Control release:** When the key is in this position all the functions of the machine can be changed.
K2		**Control lock:** When the key is in this position, some functions of the panel are disabled. The functions disabled depend on the blocking status selected.

3.2 UNIT POWER-UP

Set the welding power source ON/OFF switch to “I” to switch on the unit.

➲ AL. HEA. The message appears for a few seconds on the following displays: D1-D2

First power-up or power-ups following a RESET procedure

➲ The welding power source sets up for welding with the factory preset values. **Subsequent power-ups**

➲ The welding power source sets up for welding in the latest stable welding configuration that was active at the time of power-off.

3.3 RESET (LOAD FACTORY SETTINGS)

3.3.1 PARTIAL RESET

The reset procedure involves restoration of the parameter values and settings, except the following settings:

- settings of the SETUP menu.
- Saved JOBs.

The reset procedure is useful in the following cases:
Too many changes made to the welding parameters so user finds it difficult to restore defaults.
Unidentified software problems that prevent the current power source from functioning correctly.

Set the welding power source ON/OFF switch to “O” to switch the unit off.

☞ SIMULTANEOUS ACTIONS	S2 ⊖ S5 ⊖ Hold down both buttons simultaneously. Set the welding power source ON/OFF switch to “I” to switch on the unit.

➲ **rEC FAC** The message appears on the following displays: D1-D2
Wait for the memory clear procedure to terminate.

E2 ◯ Use the encoder to select the following setting: **rEC PAr**

Exit without confirmation

⊖ Press any button (except S3).

➲ This action will automatically close the menu.

Exit with confirmation

S3 ⊕ Press the button.

➲ This action will automatically close the menu.
Wait for the memory clear procedure to terminate.

3.3.2 TOTAL RESET

The reset procedure involves complete restoration of the default values, parameters and memory settings set in the factory.
All memory locations will be reset and hence all your personal welding settings will be lost!

The reset procedure is useful in the following cases:
Too many changes made to the welding parameters so user finds it difficult to restore defaults.
Unidentified software problems that prevent the current power source from functioning correctly.

Set the welding power source ON/OFF switch to “O” to switch the unit off.

☞ SIMULTANEOUS ACTIONS	S2 ⊖ S5 ⊖ Hold down both buttons simultaneously. Set the welding power source ON/OFF switch to “I” to switch on the unit.

➡ **rEC FAC** The message appears on the following displays: D1-D2
Wait for the memory clear procedure to terminate.

Exit without confirmation

⊖ Press any button (except S3).
➡ This action will automatically close the menu.

Exit with confirmation

S3 ⊕ Press the button.
➡ This action will automatically close the menu.
Wait for the memory clear procedure to terminate.

3.4 SET-UP (INITIAL SET-UP OF THE WELDING POWER SOURCE)

☞	With locked status active it is not possible to access this function. ⓘ See § “3.5 LOCKING PROCEDURE”.

☞ SIMULTANEOUS ACTIONS	S4 ⊖ Hold down the button. Set the welding power source ON/OFF switch to “I” to switch on the unit.

➡ **Set UP**: The message appears for a few seconds on the following displays: D1-D2
➡ The acronym relative to the setting to be edited appears on the following displays: D1
➡ The value relative to the selected setting appears on the following displays: D2
E1 ◯ Using the encoder, select the setting to be changed.
E2 ◯ Using the encoder, edit the value of the selected setting.
E1 ◯ Use the encoder to select the following setting: **ESC**
S4 ⊖ Press any button to save the setting and quit the menu.

- Setup settings

ACRONYM	SETTING	MIN	DEFAULT	MAX
Coo	COOLER ACTIVA-TION	Aut	Aut	on
rC	REMOTE CONTROLL SELECTION	oFF	oFF	06
LoC	LOCK STATUS ACTI-VATION	oFF	oFF	03
PP	PUSH PULL	on	oFF	oFF
bb	SELECTION OF BURN TYPE	SPc (*1)	Std	Std (*2)
ESC	QUITTING THE MENU			

COOLER ACTIVATION

ON= The cooler is always running when the power source is switched on. This mode is preferable for heavy duty and automatic welding procedures.
OFF= The cooler is always disabled because an air-cooled torch is in use.
AUT= When the unit is switched on the cooler is switched on for 15 s. During welding procedures the cooler runs constantly. When welding is terminated the cooler continues to run for 90 s + a number of seconds equivalent to the average current value shown using the HOLD function.

REMOTE CONTROLL SELECTION

OFF = No remote control enabled.
The unit is enabled to receive commands from a remote control equipped with 1 potentiometer.
4 = The unit is enabled to receive commands from a remote control equipped with 2 potentiometers.
5 = The unit is enabled to receive commands from a remote control equipped with 1 UP/DOWN lever.
6= The unit is enabled to receive commands from a remote control equipped with 2 UP/DOWN levers.

LOCK STATUS ACTIVATION

OFF = All adjustments enabled.
1- 2- 3 = All adjustments are disabled with the exceptions shown in .

SELECTION OF BURN TYPE

Spc = The setting activates Special burning. Anti-sticking function present to prevent the wire from sticking.
Std = The setting activates Standard burning. No wire sticking control, just final wire cut.

QUITTING THE MENU

To quit the menu select this setting and press button S4.

3.5 LOCKING PROCEDURE

The procedure inhibits unit adjustments, allowing the user to modify only certain settings depending on the selected lock status.
The procedure is used to prevent accidental alteration of the unit settings and welding settings by the operator.

Enabling
If no locking status is selected (LOC = oFF) and if you wish to set up a limitation on use of the power source, display the LOC function in the SETUP menu.

Open the Setup menu.

		The acronym relative to the setting to be edited appears on the following displays: D1
		The value relative to the selected setting appears on the following displays: D2
E1		Use the encoder to select the following setting: LoC
E2		Use the encoder to select the required lock status.
		Depending on the selected Lock, certain functions will remain enabled.
E1		Use the encoder to select the following setting: ESC
S4		Press any button to save the setting and quit the menu.

- Functions not disabled by Locks

LOCK STATUS	USER INTERFACE	RC03	RC04	RC05	RC06
OFF	All adjustments enabled. Key K1 disabled.	All adjustments enabled.	All adjustments enabled.	All adjustments enabled.	All adjustments enabled.
1	Selection of torch trigger procedure (button S5) Display of main welding parameters (button S4) Arc correction (encoder E2) Wire insertion (button S1) Gas test (button S2)		Arc correction (Potentiometer Pot2)		Arc correction (UP/DOWN lever 2)
2	Selection of torch trigger procedure (button S5) Display of main welding parameters (button S4) Arc correction (encoder E2) Synergy (encoder E1) Wire insertion (button S1) Gas test (button S2)	All adjustments enabled.	All adjustments enabled.	All adjustments enabled.	All adjustments enabled.
3	Selection of torch trigger procedure (button S5) Display of main welding parameters (button S4) JOB selection (encoder E2) Wire insertion (button S1) Gas test (button S2)			Scroll JOBS (UP/DOWN lever 1)	Scroll JOBS (UP/DOWN lever 1)

Disabling
If a lock status is selected, you can only edit parameters permitted by the currently active lock status.

Open the Setup menu.

➔ The acronym relative to the setting to be edited appears on the following displays: D1
➔ The value relative to the selected setting appears on the following displays: D2
E1 Use the encoder to select the following setting: **LoC**
E2 Use the encoder to select the following setting: **oFF**
E1 Use the encoder to select the following setting: **ESC**
S4 Press any button to save the setting and quit the menu.

3.6 GAS FLOW ADJUSTMENT

When the unit is powered on the solenoid valve opens for 1 second.
This fills the gas circuit.

S2 Open the gas solenoid valve by pressing and releasing the button.
Adjust the pressure of the gas flowing from the torch by means of the flow meter connected to the gas cylinder.
S2 Close the gas solenoid valve by pressing and releasing the button.
The solenoid valve is automatically closed after 30 seconds.

3.7 TORCH LOADING

WARNING!

Make sure the torch in use is correctly sized in relation to the welding current required and for the available and selected cooling type. This prevents the risk of burns to which the operator is potentially exposed, potential faults, and irreversible damage to the torch and the system.
If a torch is installed or replaced while the unit is running, the circuit of the newly installed must be filled with coolant to avoid the risk of damage to the torch in the case of high voltage arc strikes without any liquid in the circuit.

Power-up with operation of the cooler set to “ON” or “AUTO” mode
➔ **AL. COO. -** The message appears on the following displays: D1-D2
○ Press **any** button torch trigger to repeat the checking procedure for an additional 15 seconds.
• If the problem persists rectify the cause of the alarm.

Power-up with operation of the cooler set to “OFF”
➔ Operation of the cooler and the cooler alarm are disabled.
➔ Welding is performed without liquid cooling of the torch.

Torch change-over with operation of the cooler set to “AUTO”
Press and release the torch trigger.
➔ This serves to start the cooler for 15 seconds to fill the torch cooling circuit.

4 ALARM MANAGEMENT

This LED illuminates if an incorrect operating condition occurs.
An alarm message appears on the following display: D3

- Alarm messages

MESSAGE	MEANING	EVENT	CHECKS
AL. HEA.	**Overheating alarm** Indicates tripping of the welding power source thermal protection. Leave the equipment running so that the overheated components cool as rapidly as possible. When the problem is solved, the power source will be automatically reset.	All functions are disabled. Exceptions: - cooling fan. - cooler (if switched on).	- Make sure that the power required by the welding process is lower than the maximum rated power output. - Check that the operating conditions are in compliance with the welding power source data plate specifications. - Check for the presence of adequate air circulation around the welding power source.
AL. COO.	**Cooler alarm** Indicates insufficient pressure in the torch cooling circuit.	All functions are disabled. Exceptions: - cooling fan. The alarm message persists on the display until the first operation is performed on the user interface. **Cooler ON**: the alarm is signalled as long as the unit alarm is active and the cooler presence signal persists. **Cooler OFF**: the alarm is never signalled, irrespective of the circumstances. **Cooler AUTO**: the alarm is signalled at the times in which the unit is running; the alarm signal occurs as long as the unit presence signal persists.	- Check that the connection to the cooling unit is correct. - Check that the O/I switch is set to I and that it illuminates when the pump is running. - Check that the cooling unit is filled with coolant. - Check that the cooling circuit is intact, notably the torch hoses and the internal connections of the cooling unit.
Err. C0 Err. C1 Err. C2 Err. C4 Err. C11 Err. C12	**CAN BUS Communication Alarm** Indicates the presence of problems in data communication between the power source and wire feeder. When the unit has cooled, the welding power source will reset automatically. Exit the alarm state by performing one of the following actions: - Switch the power source off.	All functions are disabled. Exceptions: - cooling fan. - cooler (if switched on).	- Check that the connecting cable between power source and wire feeder is intact and make sure the connectors are securely tightened.

5 WELDING SETTINGS

5.1 TORCH TRIGGER MODES

5.1.1 2 STROKE MIG/MAG WELDING (2T)

1. Bring the torch up to the workpiece to be welded.
2. Press (1T) and keep the torch trigger pressed.

➡ The wire advances at the approach speed until making contact with the material.
The arc strikes and the wire feeder accelerates to the set feed rate value.

3. Release (2T) trigger to start the weld completion procedure.

➡ Gas flow continues for the time set in the post gas parameter (adjustable time).

5.1.2 4 STROKE MIG/MAG WELDING (4T)

1. Bring the torch up to the workpiece to be welded.
2. Press (1T) and release (2T) the torch trigger.

➡ The wire advances at the approach speed until making contact with the material.
The arc strikes and the wire feeder accelerates to the set feed rate value.

3. Press (3T) the trigger to start the weld completion procedure.

➡ Gas flow continues until the torch trigger is released.

4. Release (4T) torch trigger to start the post gas procedure (adjustable time).

5.1.3 3 LEVEL MIG/MAG WELDING

1. Bring the torch up to the workpiece to be welded.
2. Press (1T) torch trigger.

➡ The wire advances at the approach speed until making contact with the material.
The welding arc strikes and the wire feed rate changes to the first welding level (hot start), which is set as a percentage of the normal welding feed rate.

ⓘ This first level is used to create the weld pool: for example, when welding aluminium a value of 130 % is recommended.

3. Release (2T) the torch trigger to switch to the normal welding feed rate.
4. Press the torch trigger again (3T) to switch to the third welding level (crater filling), which is set as a percentage of the normal welding feed rate.

ⓘ This third level is used to complete the weld and fill the final crater (crater filler) in the weld pool: for example, when welding aluminium a value of 80 % is recommended.

5. Release the torch trigger a second time (4T) to close the weld and run the post gas procedure.

5.2 PARAMETERS ACTIVATION

The welding parameters are available in accordance with the selected welding mode and procedure. The table shows the settings required to enable each parameter.

KEY
1: Not enabled with manual program P0.
2: Always available.

- Parameters activation

	PROCEDURE			
MENU	PARAMETER			
1st	WORKING VOLTAGE	2	2	1
1st	INDUCTANCE	2	2	1
1st	WIRE FEED RATE	2	2	1
1st	WELDING CURRENT	1	1	1
1st	THICKNESS	1	1	1
1st	PROGRAMS	2	2	1
2°	HOT-START			1
2nd	CRATER FILLER			1
2nd	3 LEVELS SLOPE			1
2nd	SOFT START	2	2	1
2°	MOTOR SLOPE	2	2	1
2nd	BURN BACK	2	2	1
GAS	POST GAS TIME	2	2	1
GAS	PRE-GAS TIME	2	2	1

5.3 WELDING PARAMETERS

WELDING CURRENT
Output current value during welding.

HOT-START
This function is useful when using aluminium alloy welding wire.
Consequences of a higher value:
- Greater heat output.
- Greater penetration.

Consequences of a lower value:
- “Cold” weld bead.

MOTOR SLOPE
Time required to switch from SOFT START speed to welding speed.

ARC CORRECTION IN VOLTS
This parameter corrects the synergic voltage value relative to the synergic point of the MIG/MAG processes.
The default value for horizontal and frontal welding is 0.0 V.

NOTE: A value >0 produces an increase in the length of the welding arc, while a value <0 produces a shorter arc.

INDUCTANCE
Consequences of a higher value:
- “Softer” welding.
- Less spatter.
- Less positive starting.

Consequences of a lower value:
- “Harder” welding.
- More spatter.
- More reliable starting.

PRE GAS
Time of gas delivery before the arc strike.
CAUTION: an excessively long value will slow the welding procedure. Other than in the presence of special requirements the value should generally be kept at 0.0 s or anyway very low.
Consequences of a higher value:
- This parameter allows a shielded environment to be created, thereby eliminating contaminants at the start of the welding pass.

SOFT START
The soft start is the wire approach speed to the workpiece.
The value is expressed as a percentage of the set feed rate.
Consequences of a lower value:
- The start of welding is “softer”.

Consequences of a higher value:
- The welding start may prove difficult.

BURN BACK
The burn back value is associated with the quantity of wire that is burnt at the end of the welding procedure.
Consequences of a higher value:
- Wire significantly retracted into the torch nozzle.
- Consequences of a lower value:
- Stick-out at welding start is longer.

POST GAS
Time of post gas delivery when the welding arc is extinguished.
This is useful when welding at high current values or with materials that oxidise readily to cool the weld pool in an uncontaminated atmosphere.
In the absence of specific requirements the value should generally be kept low.
Consequences of a higher value:
- More effective pickling (improved appearance of workpiece at the end of the welding pass).
- Higher gas consumption.

Consequences of a lower value:
- Lower gas consumption.
- Oxidation of electrode tip (more difficult arc strike).

CRATER FILLER
This parameter serves to obtain a uniform deposit at the end of the welding process to fill the crater with a reduced wire feed rate to facilitate the deposition of filler material.
By keeping the torch trigger pressed during the 3rd time, the wire feed rate is reduced (crater filler speed) thereby ensuring optimal crater filling, until the POST GAS time is started by releasing the torch trigger (4Th time).
Consequences of a higher value:
- Difficult crater filling (values greater than 100%).

Consequences of a lower value:
- Cold welding (values close to 1%).

3 LEVELS SLOPE
Establishes the duration of the slope between the 1st and 2nd time and between the 3rd and 4th time.

6 WELDING SETTINGS

S5 Use this button to select one of the following torch trigger procedures.

PROCEDURE		
2 STROKE	4 STROKE	3 LEVEL

6.3.1 PARAMETERS SETTING

ARC CORRECTION

E2 Using the encoder, edit the value of the parameter.
The value is saved automatically.

PARAMETER	MIN	DEFAULT	MAX
ARC CORRECTION	10.0 V	-	40.0 V

INDUCTANCE SETTING

POT1 Using the potentiometer, edit the value of the parameter.

6.3.2 PARAMETERS SETTING: (1ST LEVEL)

S4 Press this button to scroll the list of settings to edit.
The LED associated with the selected setting will illuminate.
The value relative to the selected setting appears on the following displays: D1
E1 Using the encoder, edit the value of the selected setting.
The value is saved automatically.

- Parameters of the 1st level menu

PARAMETER		MIN	DEFAULT	MAX
	WIRE FEED RATE	1.5 m/min	5.0 m/min	22.0 m/min
A	WELDING CURRENT	-	*Syn	-
	THICKNESS	-	*Syn	-
PRG	PROGRAMS	P0	P0	P34
	WORKING VOLTAGE	10.0 V	20.0 V	40.0 V
	WELDING INDUCTANCE	0	-	255

*Syn: By synergy we mean a simple and fast way to regulate the power source. Through this function, an optimum balancing of all the welding parameters in every position can be granted, thus helping the user. This is the reason why the synergic curves of most of the wire types have been introduced, however these curves can be easily modified so as to allow the user to optimise his own welding procedure.

- Programmed synergic curves

	WIRE DIAMETER				ACRONYM	WIRE MATERIAL (GAS MIXTURE)
	0.8	1.0	1.2	1.4		
PROGRAMMI	P0	P0	P0	P0	MAn	MANUAL
	P1	P2	P3	--	FE	SG2/SG3 (80%Ar-20%CO2)
	P4	P5	P6	--	FE	SG2/SG3 (92%Ar- 8%CO2)
	P7	P8	P9	--	FE	SG2/SG3 (100%CO2)
	P10	P11	P12	--	S.S.	INOX 308 (98%Ar-2%CO2)
	P13	P14	P15	--	S.S.	INOX 316 (98%Ar-2%CO2)
	P16	P17	P18	--	AL	AlMg5 (100%Ar)
	P19	P20	P21	--	AL	AlSi5 (100%Ar)
	P22	P23	P24	--	CU.S.	CuSi3 (100%Ar)
	P25	P26	P27		CU.A.	CuAl8 (100%Ar)
	--	--	P28	P29	rFC	RFCW (80%Ar-20%CO2)
	--	--	P30	P31	bFC	BFCW (80%Ar-20%CO2)
	--	--	P32	P33	MFC	MFCW (80%Ar-20%CO2)
	P34	--	--	--	nPr	FREE PROGRAMS

NOTE: The synergic curves were created with reference to a fillet weld in position PB (horizontal-vertical) with 10 mm stick-out (distance from torch to workpiece).

6.3.3 PARAMETERS SETTING: (2ND LEVEL)

S4 Hold down the button for 3 seconds to gain access to the 2nd level menu.
The acronym relative to the setting to be edited appears on the following displays: D1
The value relative to the selected setting appears on the following displays: D2
E1 Use the encoder to scroll the list of settings to edit.
E2 Using the encoder, edit the value of the selected setting.
Press any button to save the setting and quit the menu.

- Parameters of the 2nd level menu

ACRONYM	PARAMETER	MIN	DEFAULT	MAX	NOTES
H.-S.	HOT-START	1 %	130 %	200 %	
C.-F.	CRATER-FILLER	1 %	130 %	200 %	
S.3L.	3 LEVELS SLOPE	0.1 s	0.5 s	10.0 s	
S.-S.	SOFT-START	10 %	30 %	100 %	*1
SLO.	MOTOR SLOPE	0 ms	40 ms	200 ms	*1
b.-b.	BOURN BACK	0 ms	16 ms	200 ms	*1

*1: When a synergic program is loaded the default value of the parameter is defined automatically by the software and the message “SYN” will be shown on the display.

6.3.4 PARAMETERS SETTING: (GAS MENU)

S2 Hold down the button for 3 seconds to open the menu.
The acronym relative to the setting to be edited appears on the following displays: D1
The value relative to the selected setting appears on the following displays: D2
E1 Use the encoder to scroll the list of settings to edit.
E2 Using the encoder, edit the value of the selected setting.
Press any button to save the setting and quit the menu.

- GAS menu parameters:

ACRONYM	PARAMETER	MIN	DEFAULT	MAX	NOTES
Po.G.	POST GAS TIME	0.0 s	0.3 s	10.0 s	*1
P.G.	PRE-GAS TIME	0.0 s	0.0 s	10.0 s	*1

*1: When a synergic program is loaded the default value of the parameter is defined automatically by the software and the message “SYN” will be shown on the display.

6.1 JOBS MANAGEMENT

Personalised welding settings, or JOBs, can be saved in memory locations and subsequently uploaded.
Up to 99 JOBS can be saved (j01-j99).
The settings of the SETUP menu are not saved.
JOBs can be managed only when the unit is not in welding mode.

6.2 SAVING A JOB

S3 Hold down the button for 3 seconds.

➔ **S.A. J.xx** The message appears on the following displays: D1-D2

ⓘ xx= number of the first free JOB.

E2 Use the encoder to select the required JOB number.

ⓘ On selecting a currently occupied memory location, the JOB number flashes.
If you confirm at this point, the new JOB will overwrite the previously saved settings.

Exit without confirmation

Press any button (except S3).

➔ This action will automatically close the menu.

Exit with confirmation

S3 Press the button.

➔ This action will automatically close the menu.

6.3 LOADING A USER JOB

S3 Press and release the button.

➔ **LO. J.xx** Only when the JOBs have been uploaded, the message is shown on the following displays: D1-D2

ⓘ xx= number of the latest JOB used.

➔ **nO. Job** If there are no JOBs in the memory the message is shown on the following displays: D1-D2

E2 Using the encoder, select the JOB number to load.

Exit without confirmation

Press any button (except S3).

➔ This action will automatically close the menu.

Exit with confirmation

S3 Press the button.

➔ This action will automatically close the menu.

➔ **J. xx** The loaded JOB number is shown on the following display: D2

ⓘ xx= number of loaded JOB.

6.4 DELETING A JOB

S3 Hold down the button for 3 seconds.

➔ **S.A. J.xx** The message appears on the following displays: D1-D2

ⓘ xx= number of the first free JOB.

E1 Use the encoder to select the following setting: **Er. J.xx**.

ⓘ xx= number of the latest JOB used.

E2 Use the encoder to select the number of the JOB to be deleted.

Exit without confirmation

Press any button (except S3).

➔ This action will automatically close the menu.

Exit with confirmation

S3 Press the button.

➔ This action will automatically close the menu.

7 TECHNICAL DATA

Directives applied	Waste electrical and electronic equipment (WEEE)		
	Electromagnetic compatibility (EMC)		
	Low voltage (LVD)		
	Restriction of the use of certain hazardous substances (RoHS)		
Construction standards	EN 60974-1; EN 60974-5; EN 60974-10 Class A		
Conformity markings	CE Equipment compliant with European directives in force		
	S Suitable in an environment with increased hazard of electric shock		
	Compliant with WEEE directive		
	RoHS Equipment compliant with RoHS directive		
Supply voltage	3 x 400 Va.c. ± 15 % / 50-60 Hz		
Mains protection	20 A Delayed		
Zmax	This equipment complies with IEC 61000-3-12 provided that the maximum permissible system impedance is less than or equal to 78 mΩ at the interface point between the user's supply and the public system. It is the responsibility of the installer or user of the equipment to ensure, by consultation with the distribution network operator if necessary, that the equipment is connected only to a supply with maximum permissible system impedance less than or equal to 78 mΩ.		
Dimensions (D x W x H)	1110 x 530 x 750 mm		
Weight	61.0 kg		
Insulation class	H		
Protection rating	IP23		
Cooling	AF: Air-over cooling (fan assisted)		
Maximum gas pressure	0,5 MPa (5 bar)		
Motor speed	1.0 - 20.0 m/min		
Wire spool: (dimensions/ weight)	300 mm / 15 kg		
Static characteristic	MIG/MAG	Flat characteristic	
Current and voltage adjustment range	MIG/MAG	5 A / 14.2 V - 320 A / 30.0 V	
Welding current / Working voltage	MIG/MAG	45 % (40° C)	320 A - 30.0 V
		60 % (40° C)	280 A - 28.0 V
		100 % (40° C)	230 A - 25.5 V
Maximum input power	MIG/MAG	45 % (40° C)	11.6 kVA – 11.1 kW
		60 % (40° C)	9.5 kVA – 9.0 kW
		100 % (40° C)	7.1 kVA – 6.7 kW

Maximum input current	MIG/MAG	45 % (40° C)	17.0 A
		60 % (40° C)	13.1 A
		100 % (40° C)	10.3 A
Maximum effective supply current	MIG/MAG	45 % (40° C)	11.4 A
		60 % (40° C)	10.5 A
		100 % (40° C)	10.3 A
No-load voltage (U_0)	MIG/MAG	53 V	
Reduced no-load voltage (U_r)	MIG/MAG	10 V	
Power source efficiency	Efficiency (320A / 30,0V): 87,3%		
	No-Load condition power consumption (U1= 400 Va.c.): 29 W		
Essential raw materials	According to the information provided by our suppliers, this product does not contain essential raw materials in quantities greater than 1g per component.		

8 WIRING DIAGRAM

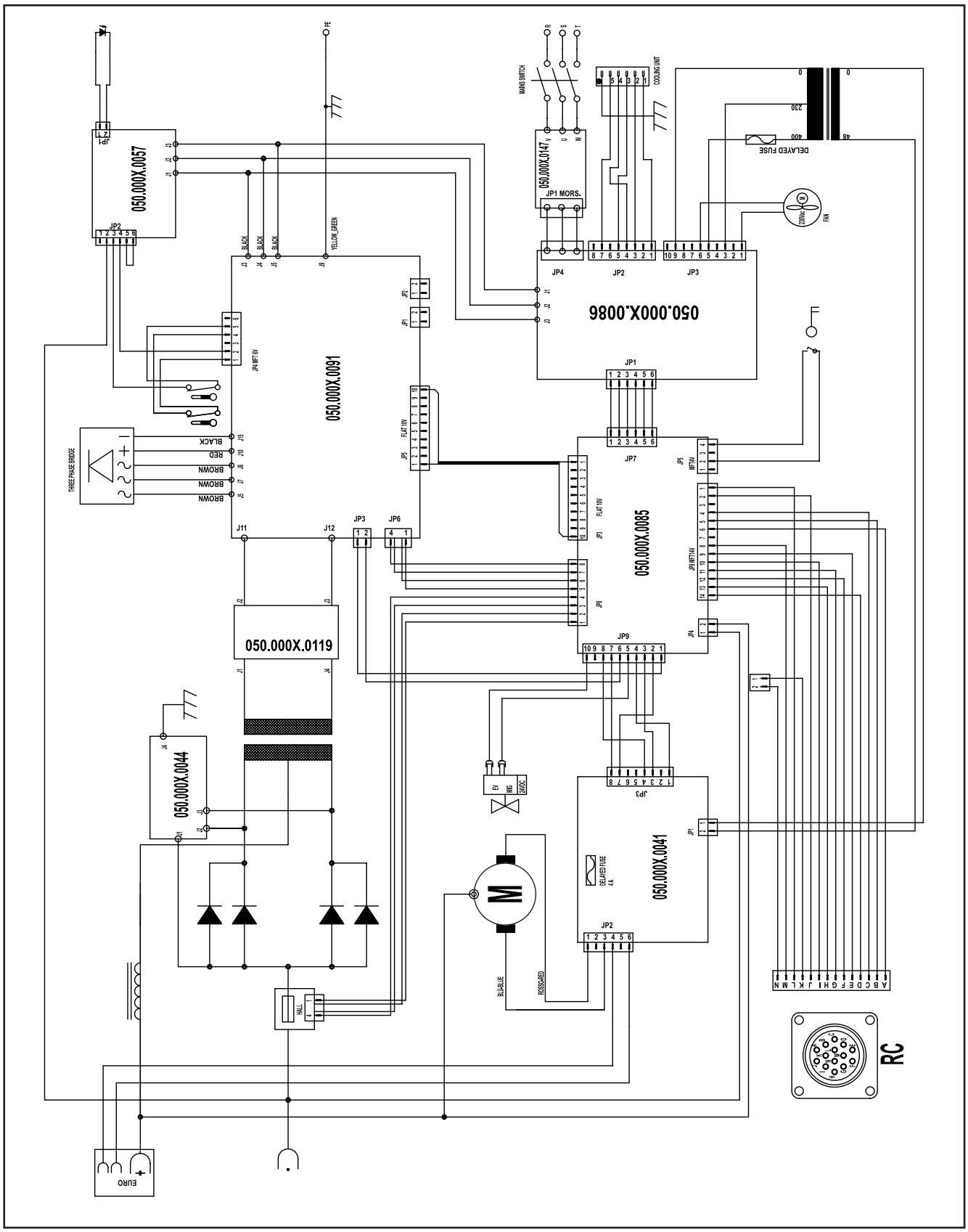

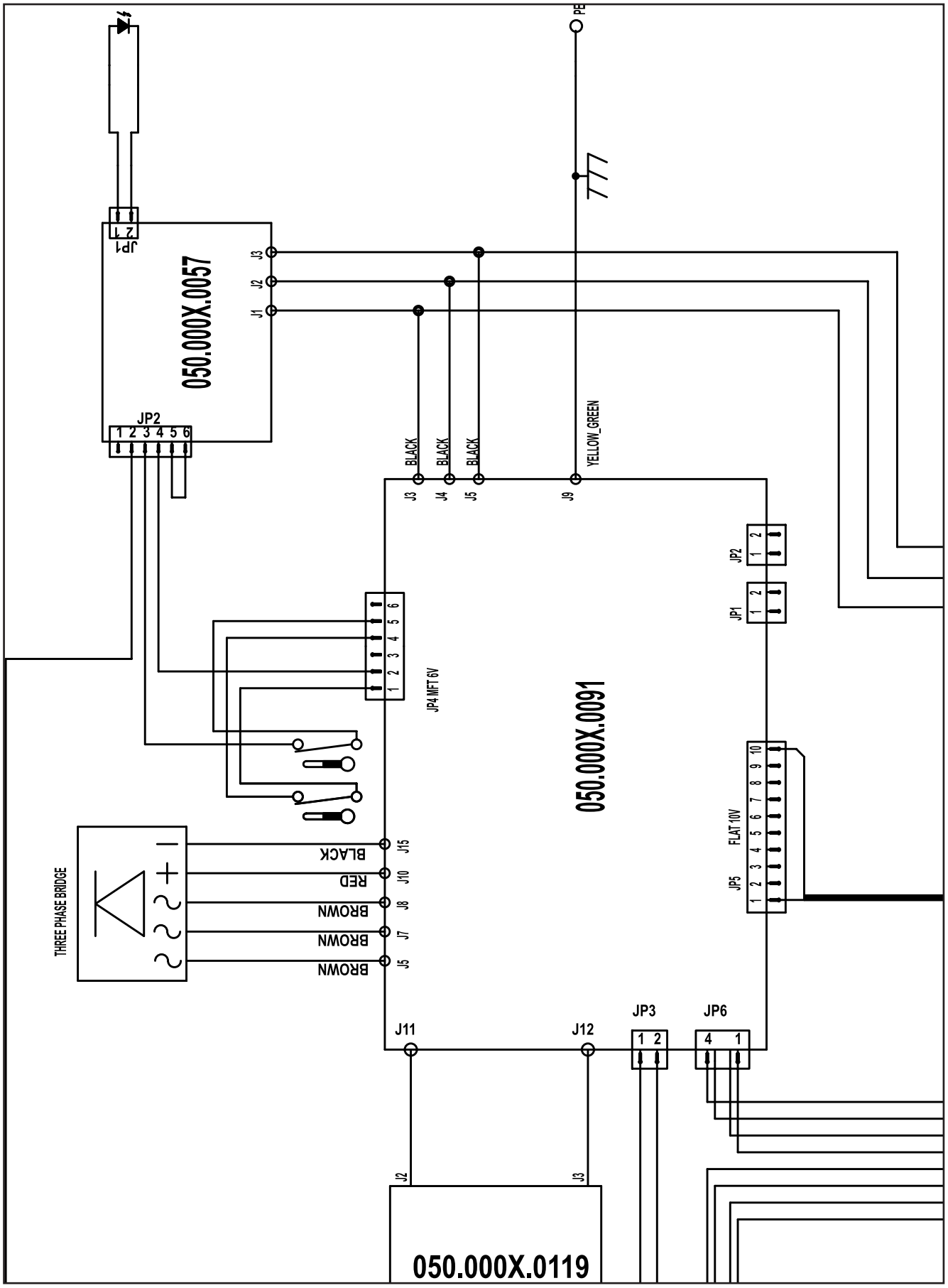
PE
JP1
2 1
050.000X.0057
J3
J2
J1
JP2
1 2 3 4 5 6
BLACK
BLACK
BLACK
YELLOW_GREEN
J3
J4
J5
J9
JP2
JP1
JP4 MFT 6V
050.000X.0091
FLAT 10V
JP5
THREE PHASE BRIDGE
BLACK
RED
BROWN
BROWN
BROWN
J15
J10
J8
J7
J5
J11
J12
JP3
JP6
1 2
4 1
J2
J3
050.000X.0119

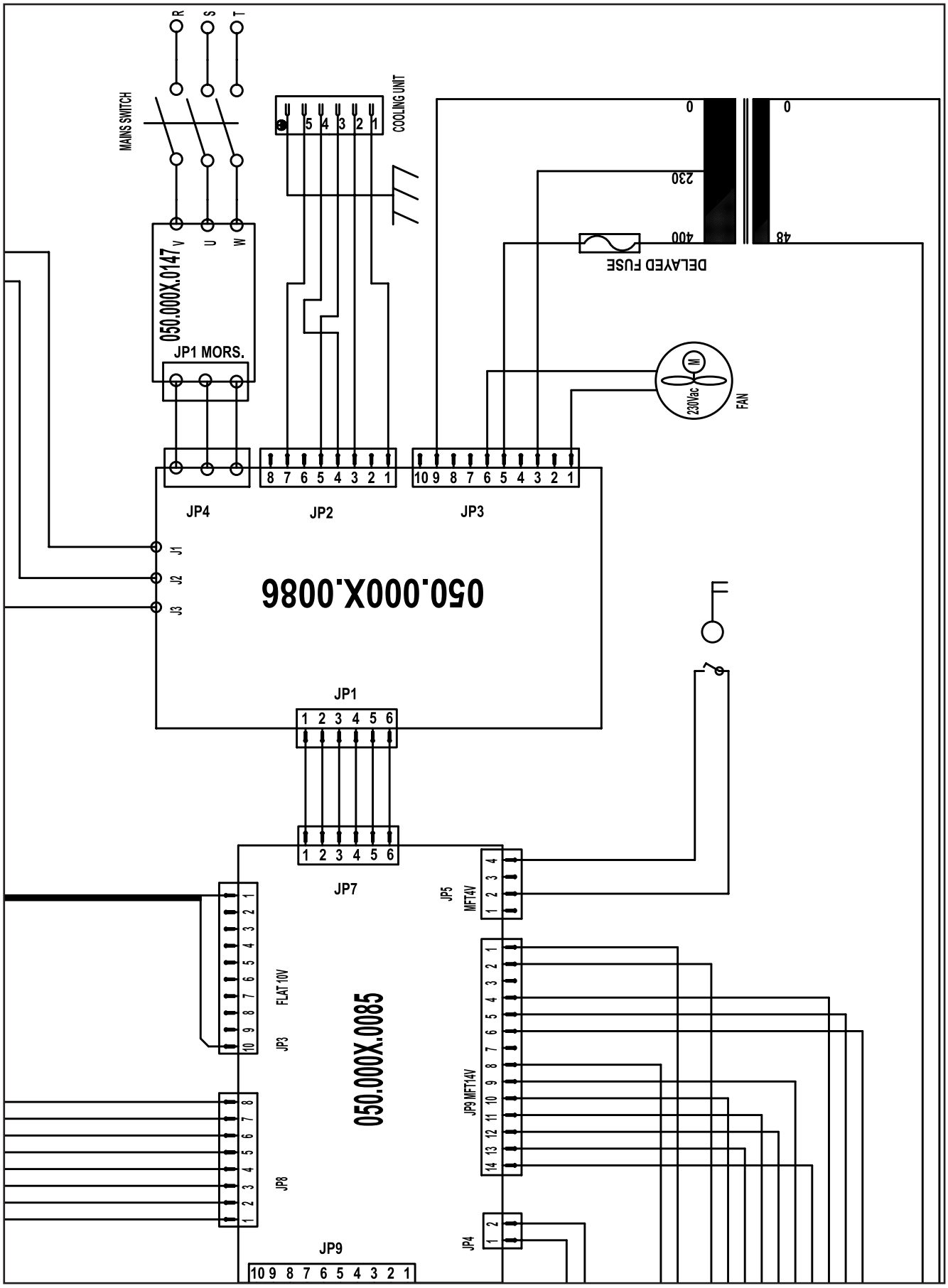
R
S
T
MAINS SWITCH
COOLING UNIT
5 4 3 2 1
0
230
400
48
0
DELAYED FUSE
050.000X.0147
V
U
W
JP1 MORS.
M
230Vac
FAN
8 7 6 5 4 3 2 1
10 9 8 7 6 5 4 3 2 1
JP4
JP2
JP3
J1
J2
J3
050.000X.0086
JP1
1 2 3 4 5 6
1 2 3 4 5 6
JP7
JP5
MFT14V
FLAT 10V
JP3
050.000X.0085
JP9 MFT14V
JP8
JP4
JP9
10 9 8 7 6 5 4 3 2 1

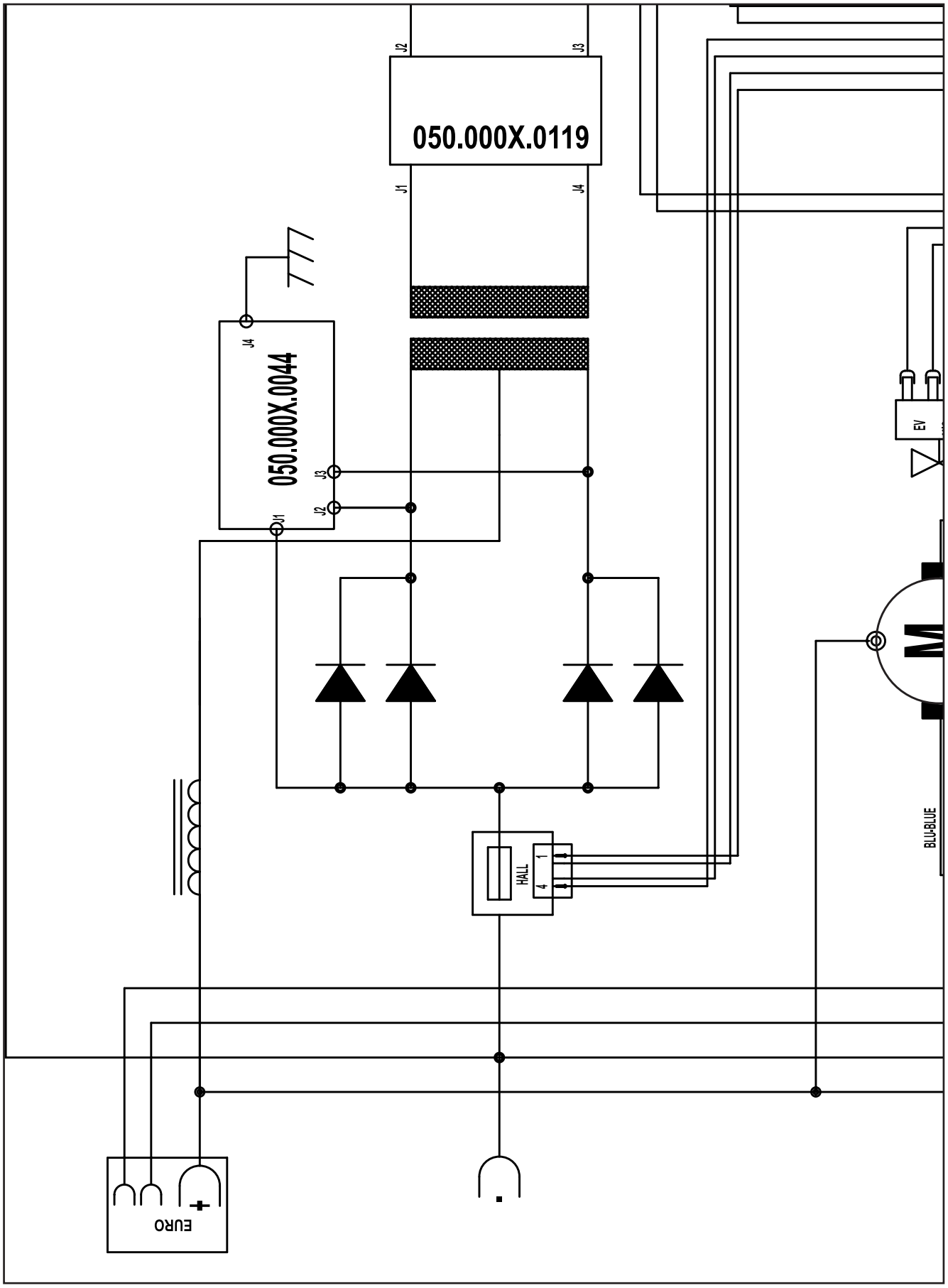
050.000X.0119
J2
J3
J1
J4
050.000X.0044
J4
J3
J2
J1
EV
M
BLU-BLUE
HALL
1
4
EURO
+
-

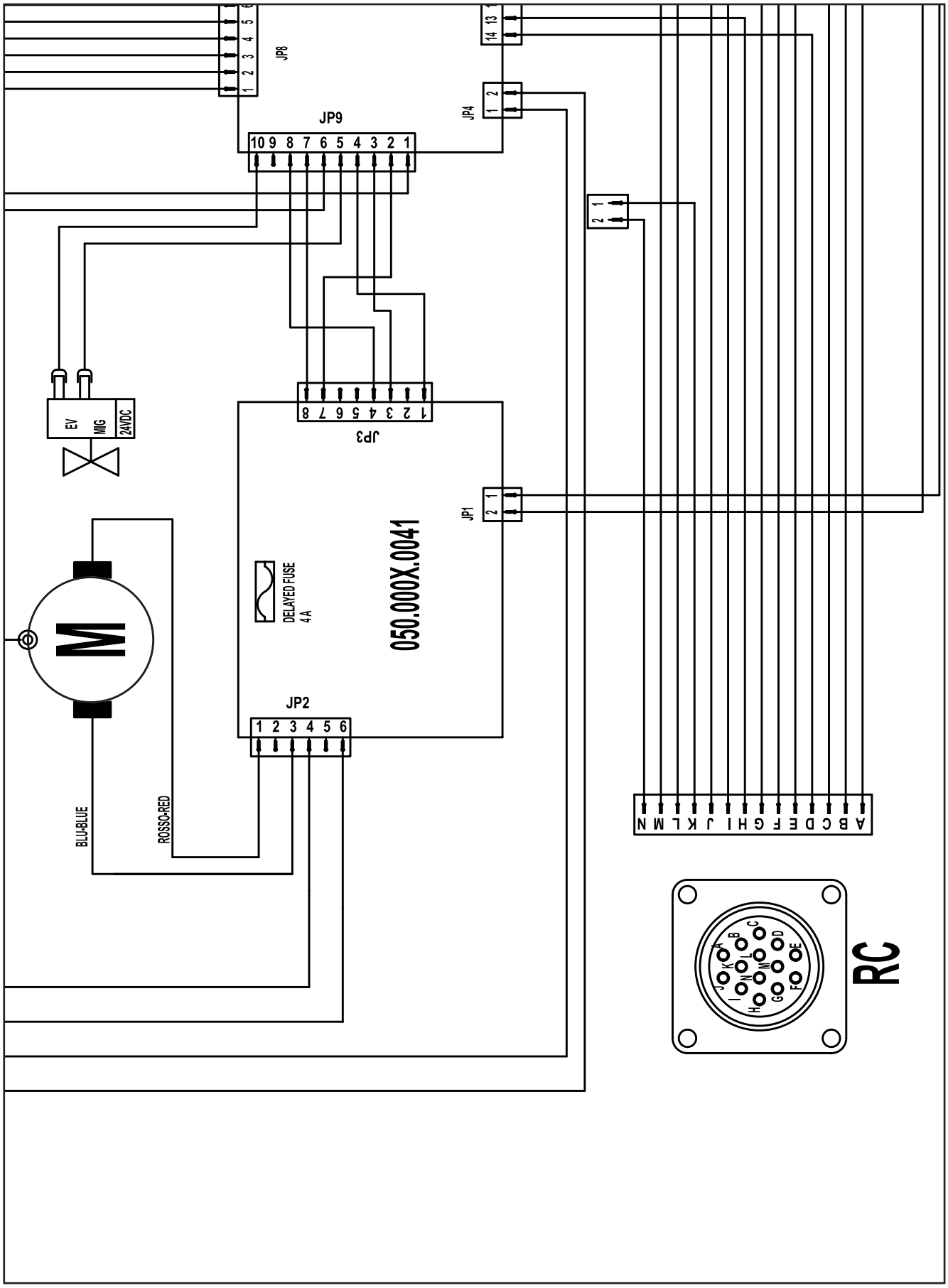
JP8
JP9
JP4
JP3
JP1
JP2
EV
MIG
24VDC
DELAYED FUSE
4A
050.000X.0041
M
BLU-BLUE
ROSSO-RED
RC

8.1 REMOTE CONTROL CONNECTOR (front panel)

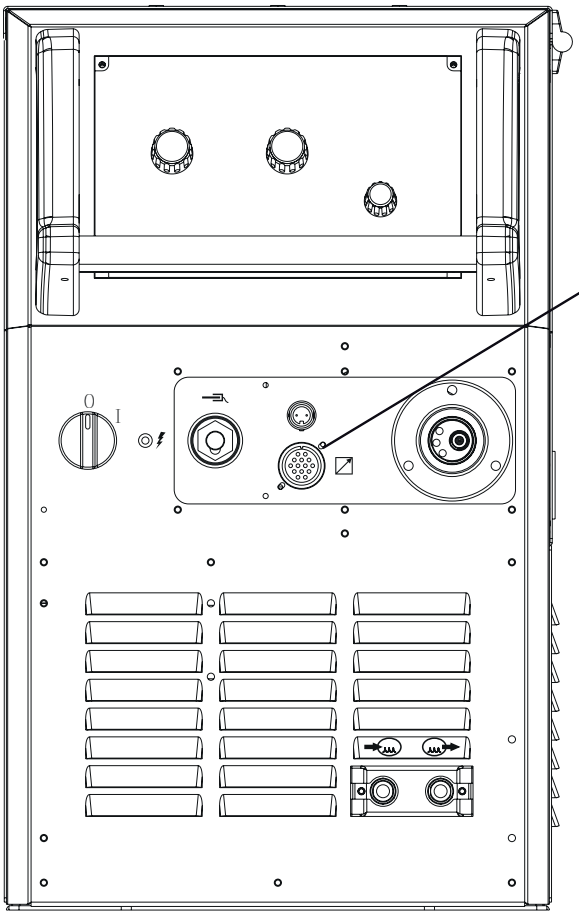

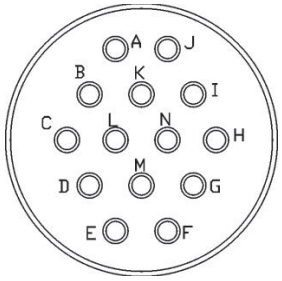

Pin	Nome	Tensione	Ingresso/Uscita
A	+5 V	5 V d.c.	Uscita
B	AN2 (5 V)	0-5 V	Ingresso
C	AN1 (5 V)	0-5 V	Ingresso
D	GND	GND	Uscita
E	D1-IN	0-5 V	Ingresso
F	AN2 (10 V)	0-10 V	Ingresso
G	D3-OUT	0-5 V	Uscita
H	AN1 (10 V)	0-10 V	Ingresso
I	D2-IN	0-5 V	Ingresso
J	RC	-	Non usato
K	-	-	Non usato
L	-	-	Non usato
M	-	-	Non usato
N	-	-	Non usato

8.1.1 RC03: Wiring diagram

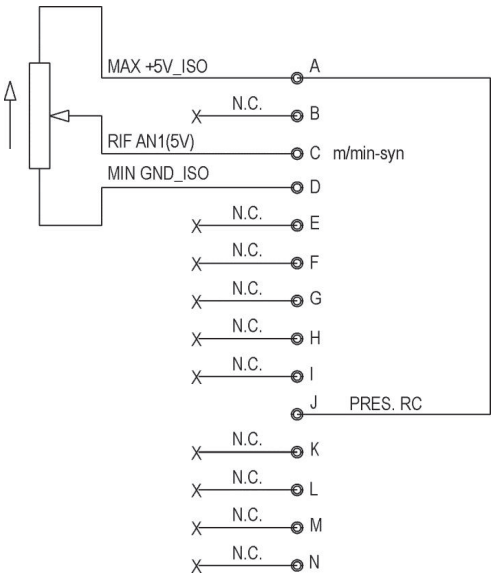

2 kOhm - 10 kOhm potentiometer

8.1.2 RC04: Wiring diagram

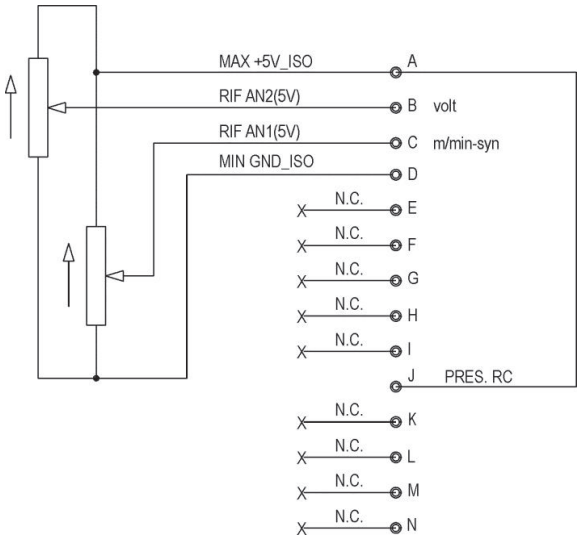

2 kOhm - 10 kOhm potentiometer

8.1.3 RC05: Wiring diagram

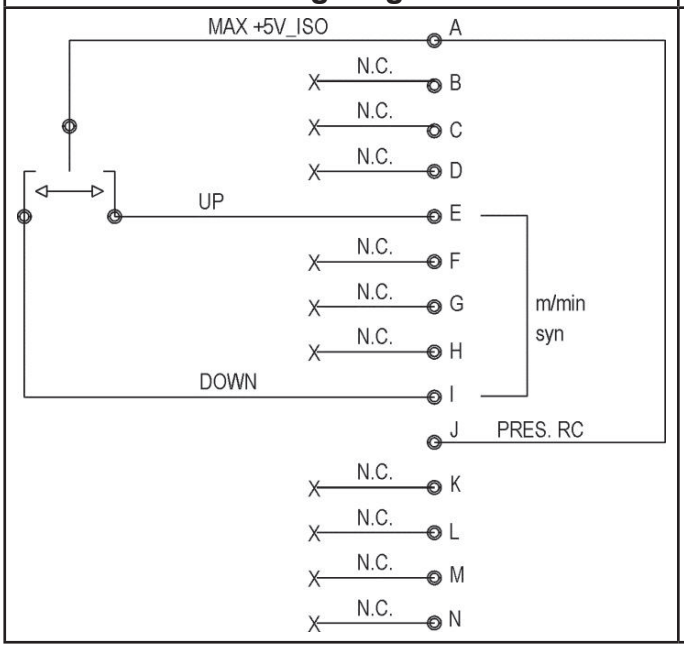

8.1.4 RC06: Wiring diagram

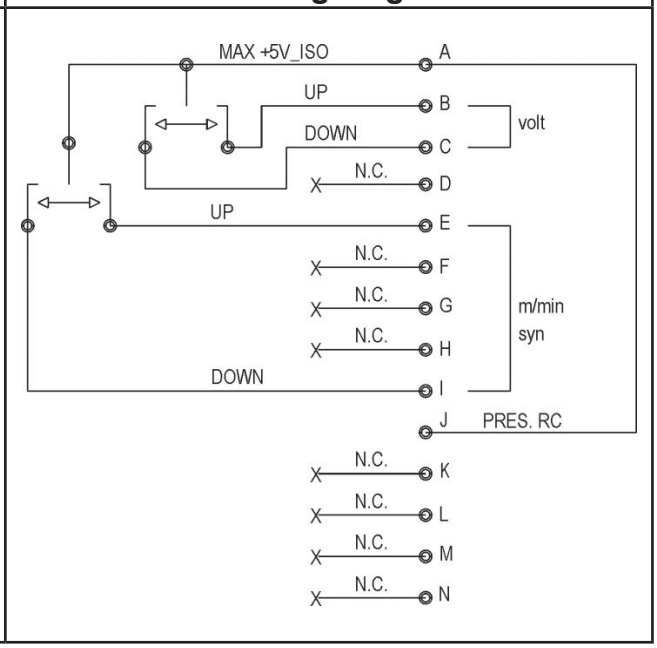

8.2 PUSH-PULL (OPTIONAL)

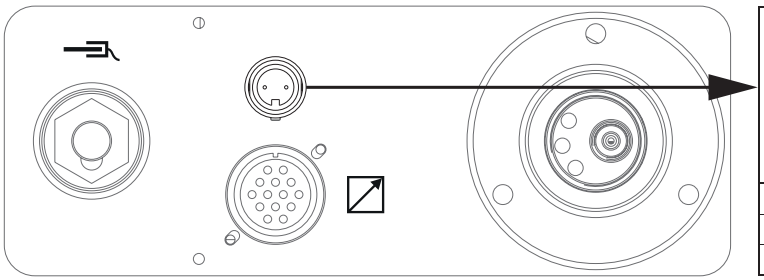

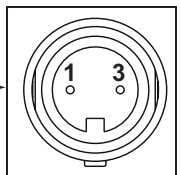

Pin	Nome	Tensione
1	-	0 V
3	+	42Vd.c.

9 SPARE PARTS

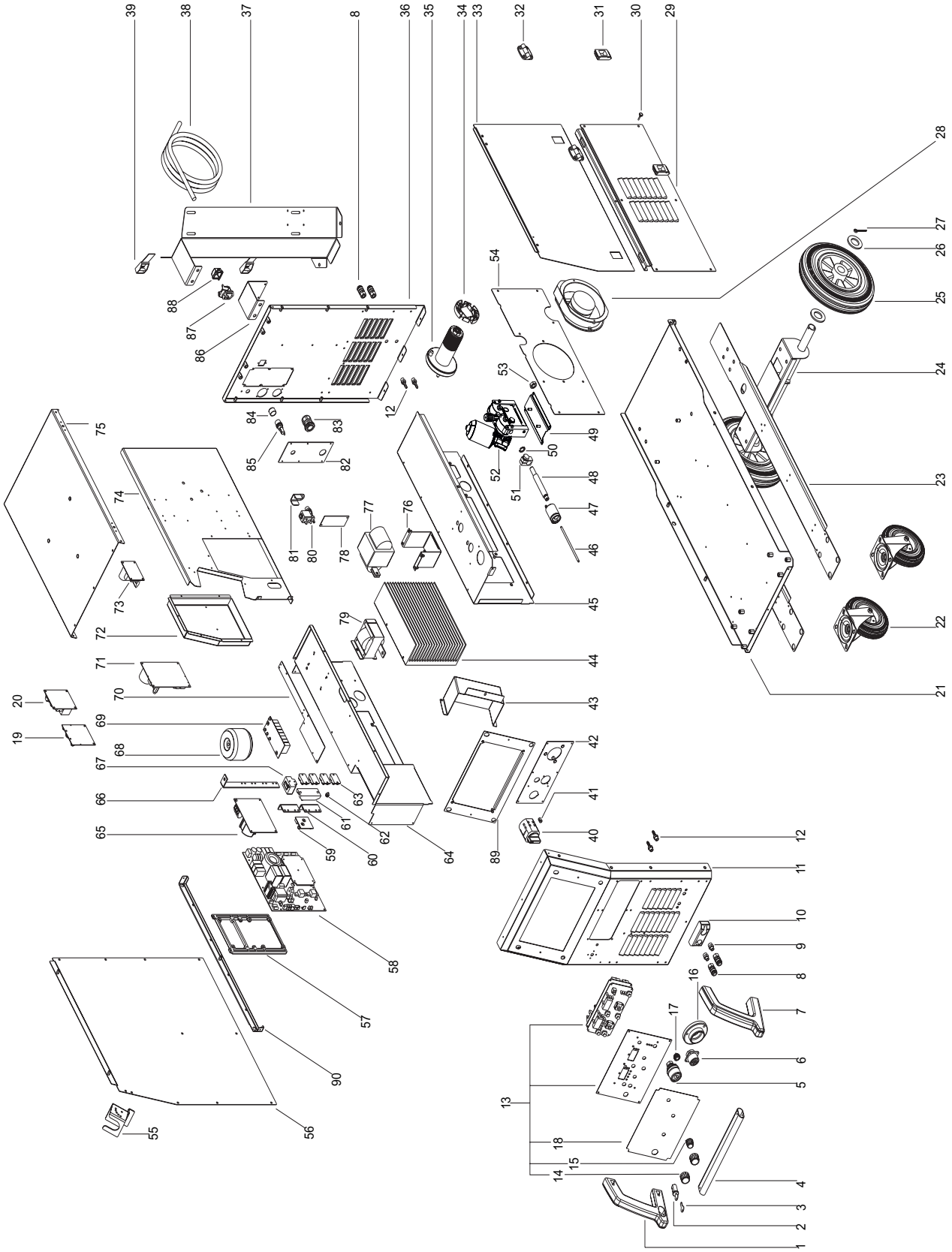

No.	CODE	DESCRIPTION
1	011.0006.0030	RIGHT HANDLE
2	040.0001.0151	KEY
3	040.0001.0150	KEY SWITCH
4	011.0016.0128	FRONT HANDLE
5	021.0001.0259	FIXED SOCKET 400 A
6	022.0002.0177	REMOTE LOGIC CABLE
7	011.0006.0029	LEFT HANDLE
8	018.0002.0004	QUICK CLUTCH
9	017.0003.0055	NIPPLE CONNECTOR
10	011.0016.0156	QUICK CLUTCH COVER PLATE
11	011.0016.0134	FRONT PLATE (1)
12	016.5001.3040	SLEEVE HOSE ADAPTER FOR RUBBER HOSE Ø= 6 mm F= 1/8 M
13	050.5071.0000	COMPLETE FRONT LOGIC PANEL
14	014.0002.0010	KNOB WITHOUT POINTER
15	014.0002.0008	KNOB WITHOUT POINTER
16	021.0001.2005	PLASTIC HOUSING
17	016.0011.0011	CAP Ø=18
18	013.0021.0501	FRONT PANEL LABEL
19	050.0002.0057	POWER SUPPLY CONTROL BOARD
20	050.0001.0086	FAN AND C.U. CONTROL BOARD
21	011.0016.0136	BOTTOM COVER
22	004.0001.0013	CASTOR
23	011.0016.0138	BASE SLIDE METAL PLATE
24	011.0016.0129	WHEEL FIXING PLATE
25	004.0001.0014	FIXED WHEEL
26	016.1000.1002	WASHER M27
27	016.0002.0005	SPLIT PIN
28	003.0002.0016	FAN
29	011.0000.0961	RIGHT COVER PANEL
30	016.0009.0005	PVC FOOT
31	011.0006.0002	PLATE SLIDE CLOSURE
32	011.0006.0007	PLASTIC HINGE
33	011.0000.0971	DOOR PLATE
34	002.0000.0287	PRESSURE CAP
35	011.0006.0062	SPOOL SUPPORT
36	011.0016.0135	REAR PLATE (1)
37	011.0016.0139	GAS BOTTLE SUPPORT PLATE
38	045.0002.0014	NEOPRENE CABLE
39	005.0001.0012	BELT FOR GAS BOTTLE
40	040.0001.0017	THREE-POLE SWITCH
41	022.0002.0190	LED WIRING
42	011.0016.0144	FRONT PLATE (2)
43	011.0016.0151	FRONT LOGIC BOARD COVER PLATE
44	015.0001.0019	HEAT SINK
45	011.0016.0147	MOTOR SUPPORT PLATE (1)
46	021.0001.2022	CAPILLARY TUBE FOR EURO CONNECTOR
47	021.0001.2000	AXIAL GAS BODY
48	021.0001.2017	BRASS GUIDE FOR EURO CONNECTOR
49	011.0016.0163	MOTOR SUPPORT PLATE (2)
50	016.1100.1200	KNURLED WASHER M12
51	021.0001.2010	CURRENT CLAMP FOR BRASS GUIDE
52	002.0000.0029	WIRE FEEDER MOTOR
53	016.2000.1219	NUT M19
54	011.0016.0153	FANS SUPPORT
55	011.0015.0029	TORCH HOLDER

No.	CODE	DESCRIPTION
56	011.0000.0931	LEFT COVER PANEL
57	012.0003.0000	INTERNAL FRAMES
58	050.0013.0091	POWER BOARD
59	050.0003.0044	SNUBBER BOARD
60	045.0006.0081	DIODE-DIODE BRACKET
61	032.0001.8215	THREE PHASE BRIDGE RECTIFIER
62	040.0003.1002	THERMAL CUT-OUT 75°C
63	032.0002.2403	ISOTOP DIODE
64	011.0016.0146	TUNNEL HOUSING (1)
65	050.0001.0147	MAINS FILTER BOARD
66	045.0006.0082	DIODES-SOCKET COPPER BRACKET
67	041.0004.0301	HALL EFFECT SENSOR
68	041.0006.0007	AUXILIARY TRANSFORMER
69	050.0002.0119	PRIMARY CAPACITOR BOARD
70	011.0016.0152	BOARDS SUPPORT
71	050.0001.0041	MOTOR BOARD
72	011.0016.0149	WIRE FEEDER COVER PLATE
73	050.0002.0024	PUSH-PULL BOARD (OPTIONAL)
74	011.0016.0148	INTERNAL PLATE
75	011.0016.0140	UPPER COVER
76	011.0009.0121	TRANSFORMER SUPPORT PLATE
77	042.0003.0004	POWER TRANSFORMER
78	011.0016.0117	CABLE BUNDLE CONNECTION COVER PLATE
79	044.0004.0014	OUTPUT INDUCTOR
80	017.0001.5542	SOLENOID VALVE
81	011.0002.0018	SOLENOID VALVE PLATE
82	013.0000.7001	REAR PLATE (2)
83	045.0000.0017	CABLE CLAMP
84	016.0011.0004	FUSE HOLDER CAP
85	040.0006.1880	FUSE CARRIER
86	011.0012.0058	COOLING UNIT SUPPORT PLATE
87	022.0002.0132	C.U. POWER SUPPLY WIRING
88	021.0013.0007	C.U. POWER CONNECTOR CAP
89	011.0016.0109	PANEL SUPPORT PLATE
90	011.0016.0143	COVER PANEL SUPPORT PLATE

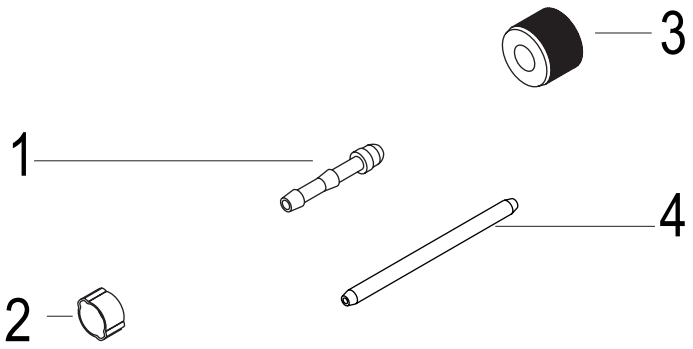

No.	CODE	DESCRIPTION
	021.0000.0009	TORCH CONNECTORS COMPLETE KIT
1	016.5001.0822	HOSE ADAPTOR 1/4
2	016.0007.0001	HOSE CLAMP Ø= 11-13
3	016.5001.0823	NUT 1/4
4	021.0001.2028	CAPILLARY TUBE

9.1 WIRE FEEDER MOTOR

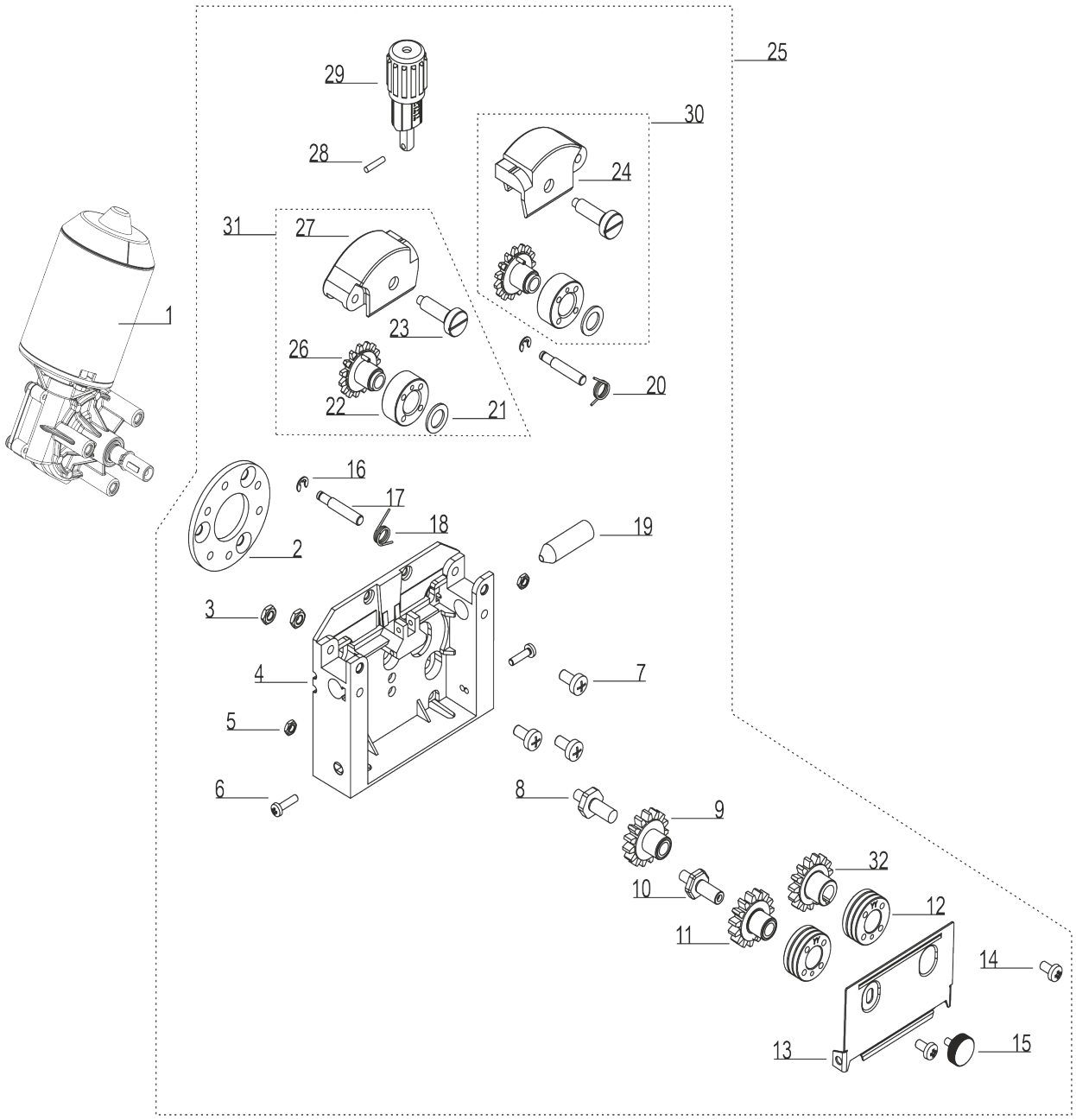

No.	CODE	DESCRIPTION
1	002.0000.0201	MOTOR COIL
2	002.0000.0308	DISTANCE RING
3	002.0000.0349	NUT M6
5	002.0000.0348	NUT M5
4	002.0000.0327	FEED PLATE
6	002.0000.0347	SCREW M4x18
7	002.0000.0350	SCREW M6x12
8	002.0000.0341	SHAFT (1)
9	002.0000.0343	MAIN GEAR DRIVE
10	002.0000.0340	SHAFT (2)
11	002.0000.0342	GEAR DRIVE
12	002.0000.0121	FEED ROLL
13	002.0000.0345	INTERNAL PROTECTION PLATE
14	002.0000.0324	SCREW M5x10
15	002.0000.0346	RETAINING SCREW M5x6
16	002.0000.0352	SNAP RING 4 mm
17	002.0000.0336	JOINT AXLE
18	002.0000.0337	LEFT SPRING
19	002.0000.0297	INLET GUIDE WITH SOFT LINER
20	002.0000.0338	RIGHT SPRING
21	002.0000.0371	WASHER
22	002.0000.0370	PRESSURE ROLL
23	002.0000.0372	PRESSURE ROLL AXLE
24	002.0000.0368	RIGHT PRESSURE ARM
25	002.0000.0061	WIRE FEEDER BODY COMPLETE
26	002.0000.0369	GEAR WHEEL UPPER
27	002.0000.0367	LEFT PRESSURE ARM
28	002.0000.0319	PIN
29	002.0000.0339	COMPLETE PRESSURE DEVICE
30	002.0000.0366	COMPLETE RIGHT PRESSURE ARM
31	002.0000.0365	COMPLETE LEFT PRESSURE ARM
32	002.0000.0344	GEAR WHEEL UPPER

9.2 WIRE FEED ROLLERS

Dual drive roller (2 rollers with grooves, 2 flat rollers)

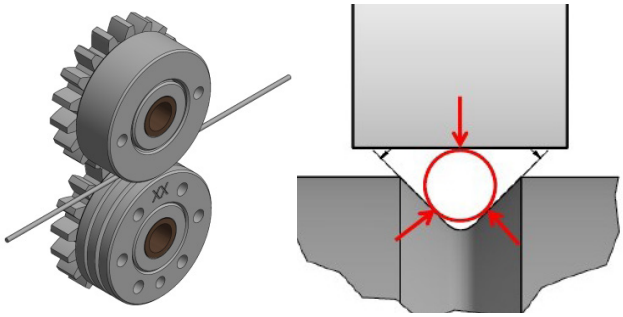

Code	Ø wire	Ø roller (D / d)	Groove type
002.0000.0119	0.6-0.8	D=30x12/d=14 V	 V groove Solid wire
002.0000.0120	0.8-1.0	D=30x12/d=14 V	
002.0000.0121	1.0-1.2	D=30x12/d=14 V	
002.0000.0125	1.2-1.6	D=30x12/d=14 V	
002.0000.0124	1.0-1.2	D=30x12/d=14 VK	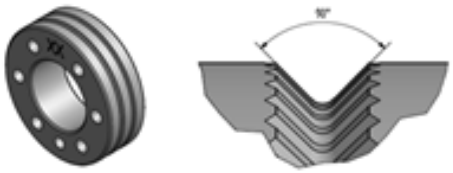 VK shape Flux-cored wire
002.0000.0127	1.2-1.6	D=30x12/d=14 VK	
002.0000.0122	0.8-1.0	D=30x12/d=14 U	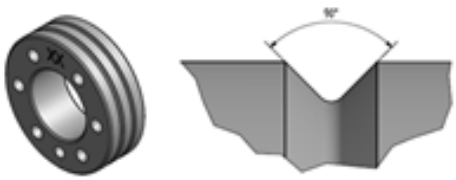 U shape Aluminium wire
002.0000.0123	1.0-1.2	D=30x12/d=14 U	
002.0000.0126	1.2-1.6	D=30x12/d=14 U	

002.0000.0369	GEAR ADAPTOR FEED ROLL (BRONZE BUSHING)	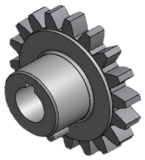
002.0000.0370	SMOOTH FOR DOUBLE FEED ROLL	

Cod. 006.0001.1600
11/07/2022 V.2.12

WELD THE WORLD

www.weco.it